BRICK SORTER

WeDo 2.0

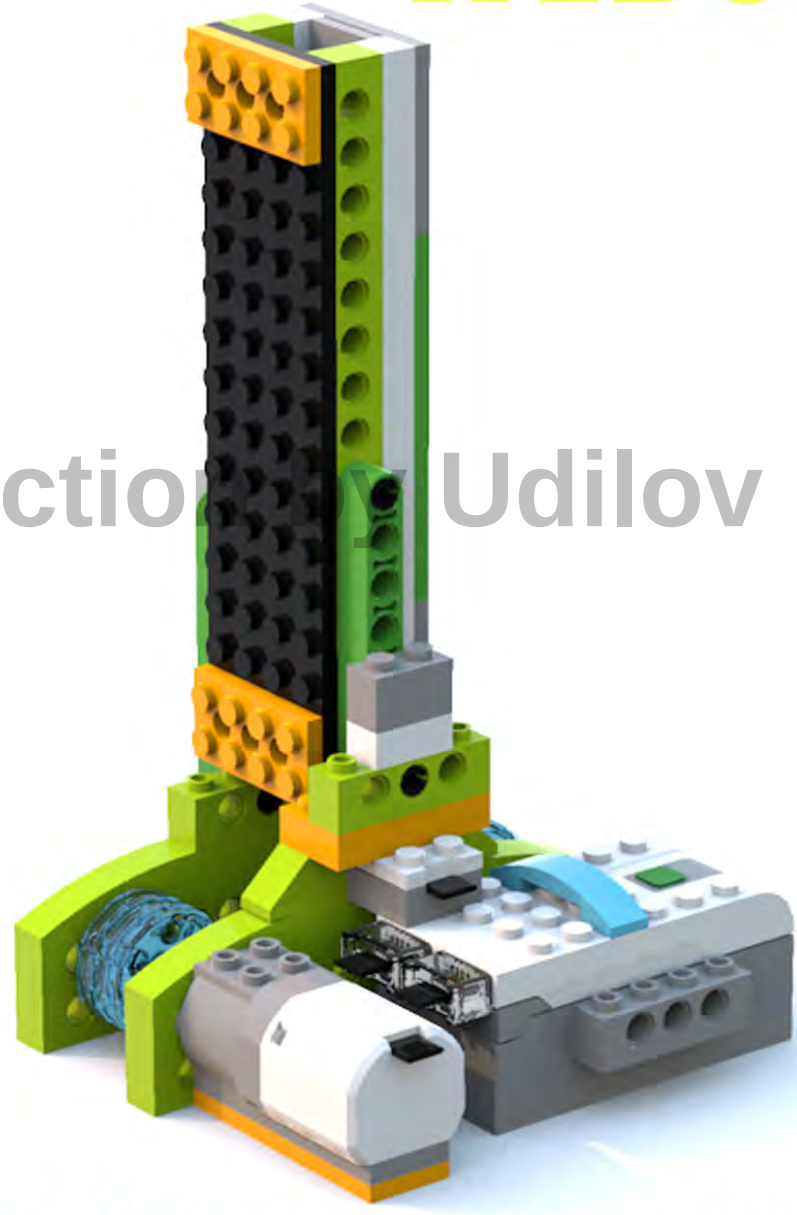

Instructions by Udilov Daniil

BUILDING INSTRUCTION + PROGRAM

BY UDILOV DANIIL

1

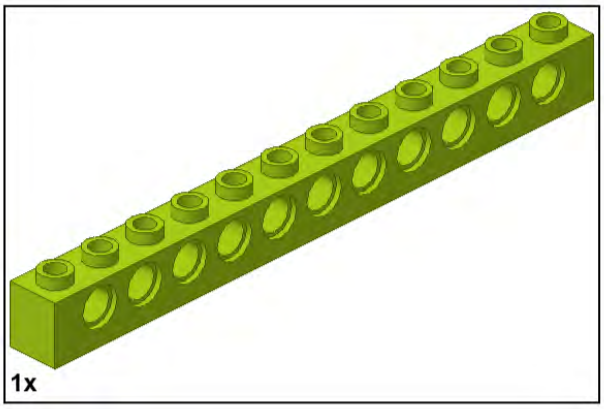

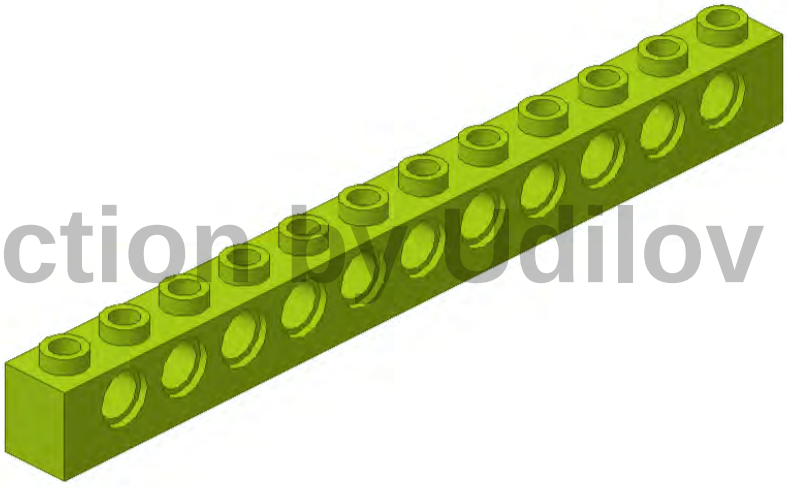

Instruction by Odilov Daniil

2

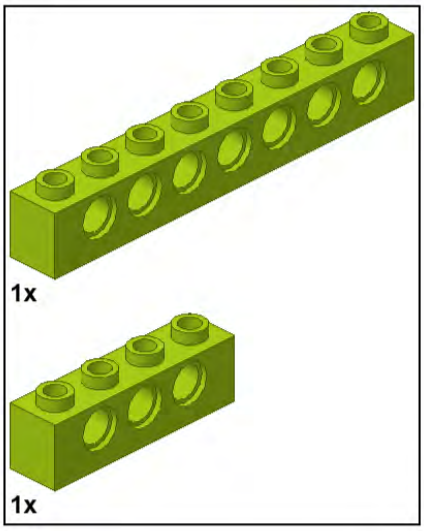

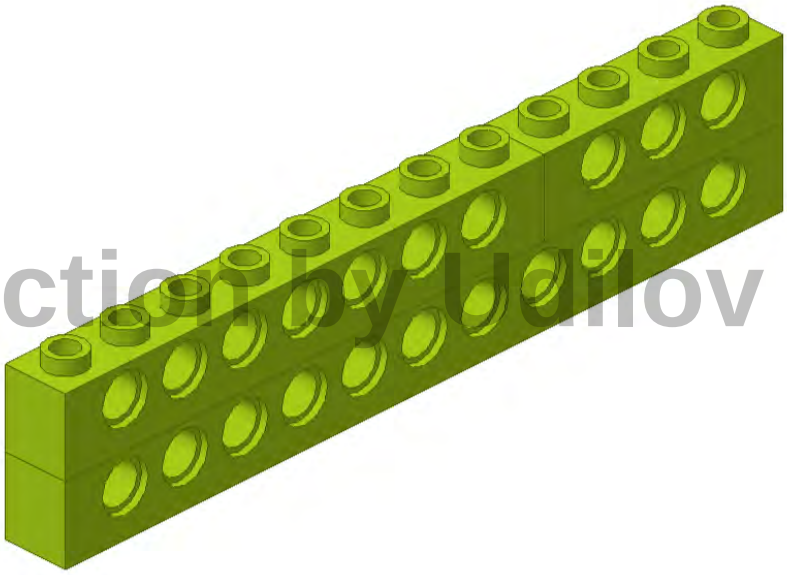

Instruction by Udilov Daniil

3

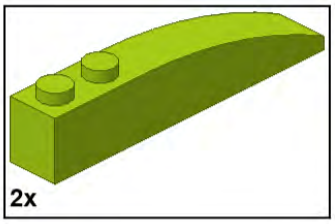

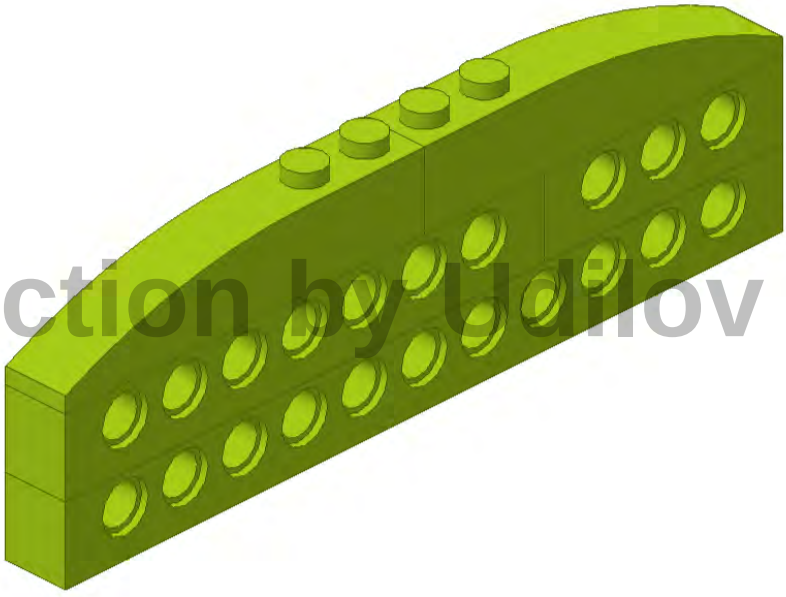

Instruction by Udilov Daniil

4

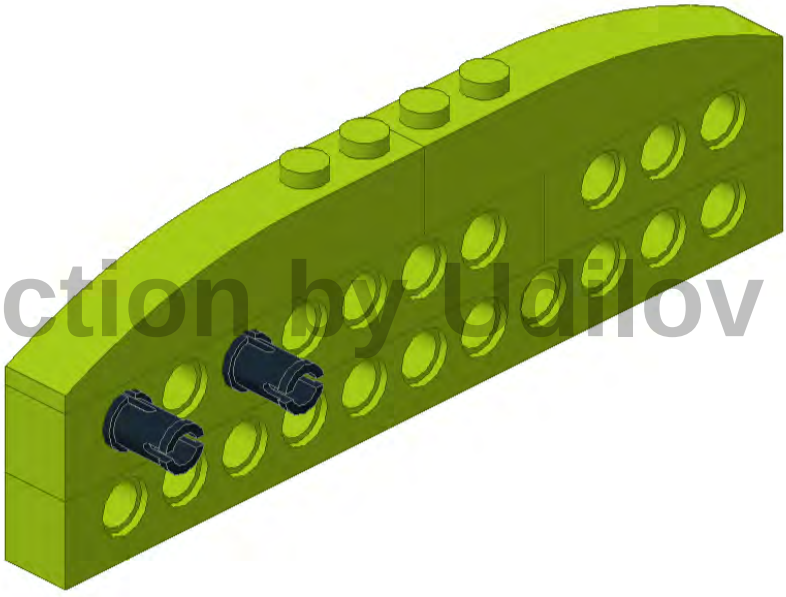

Instruction by Udilov Daniil

4

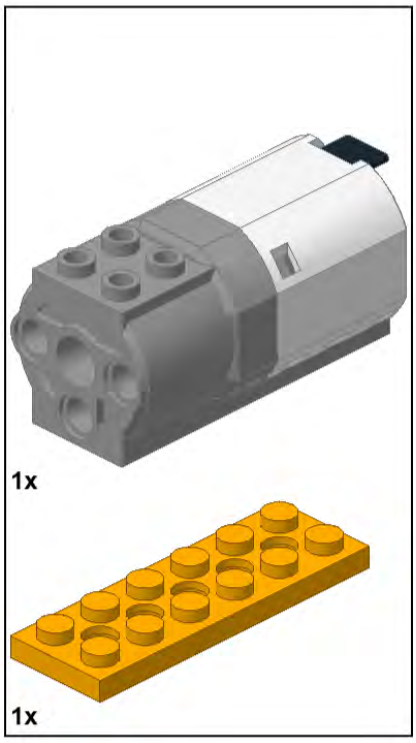

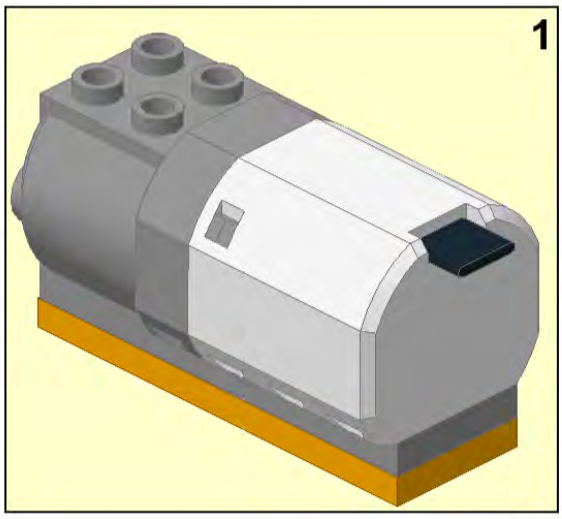

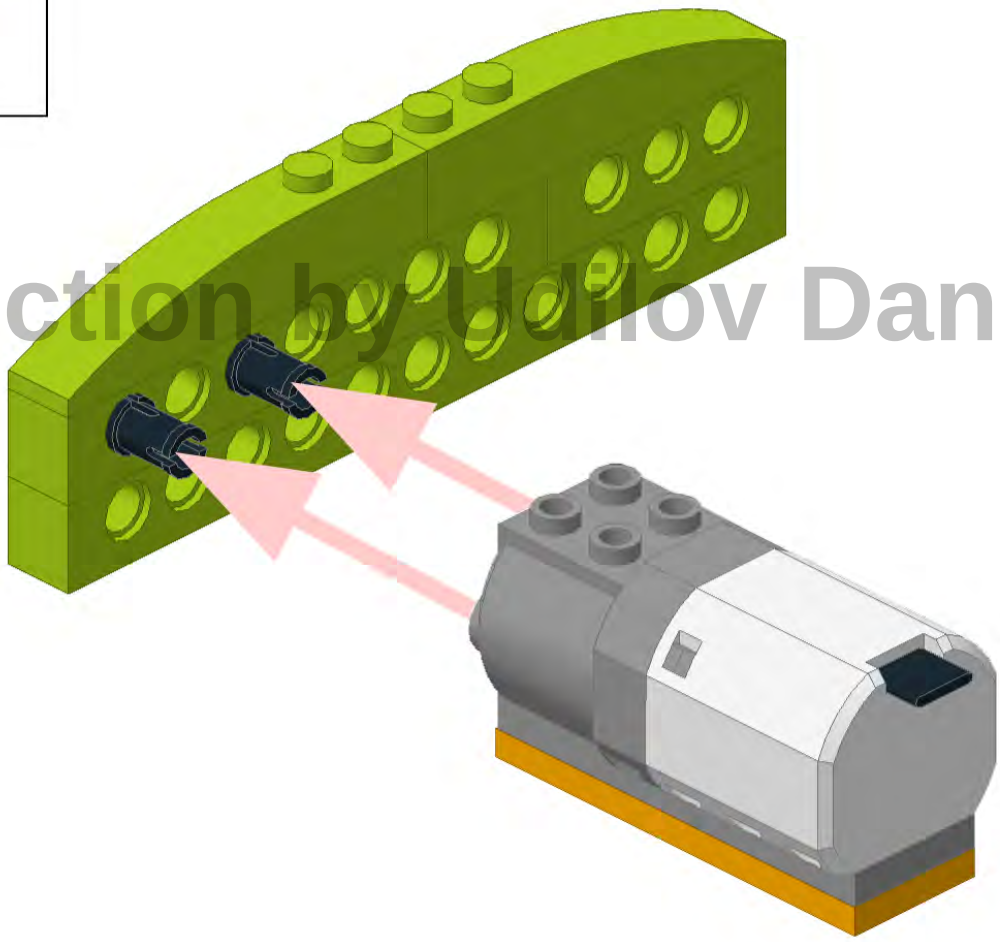

Instruction by Udilov Daniil

6

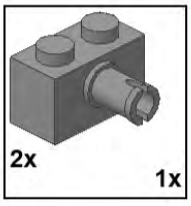

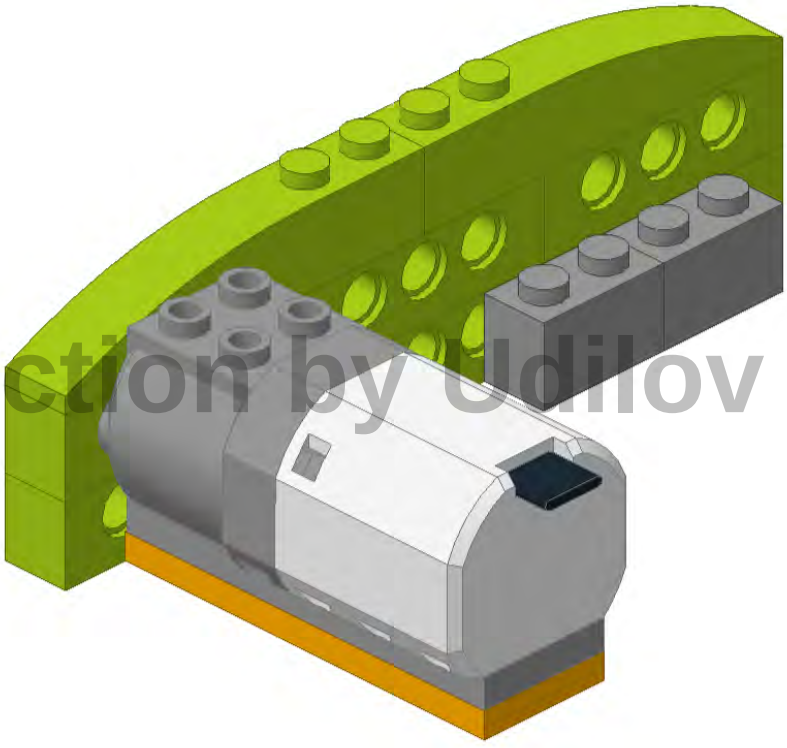

Instruction by Udilov Daniil

7

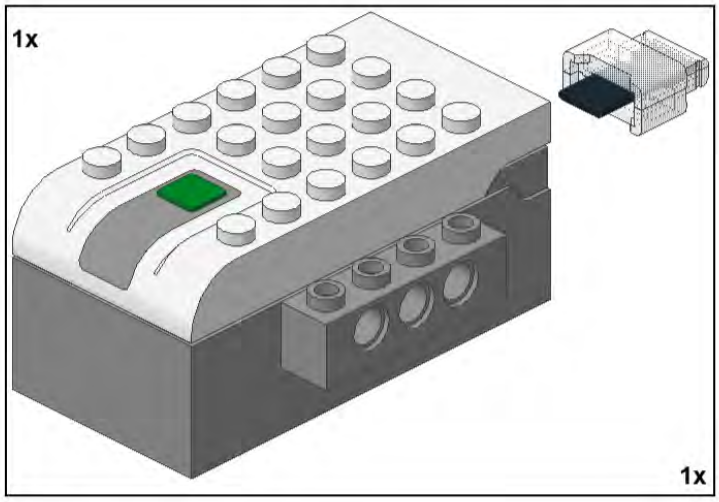

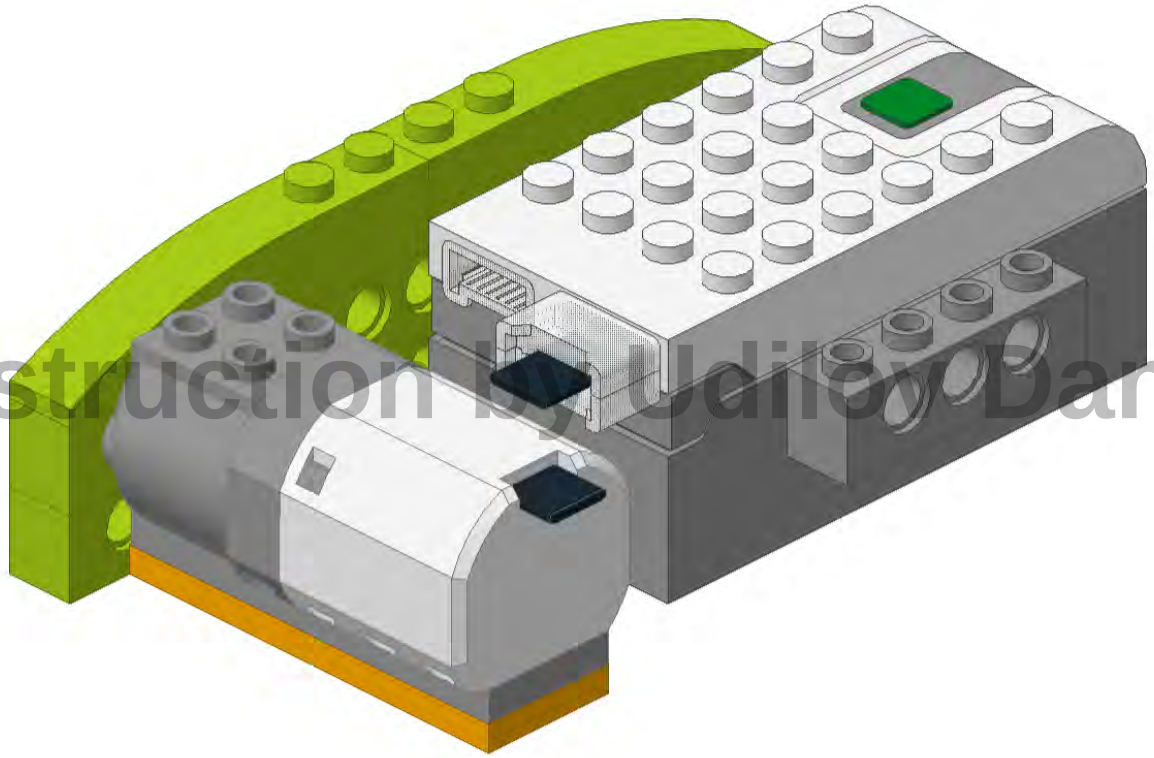

Instruction by Udilov Daniil

8

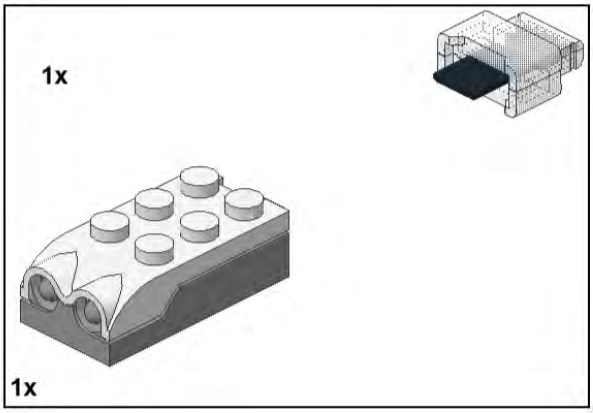

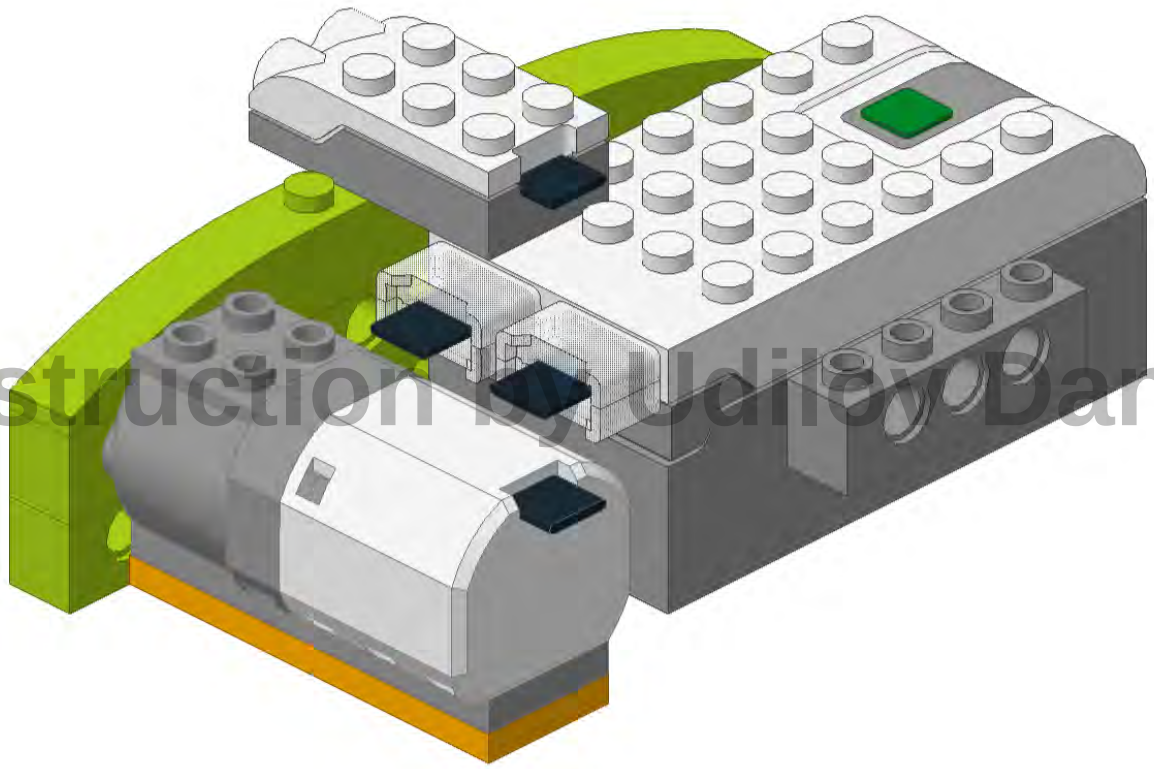

Instruction by Udiloy Daniil

9

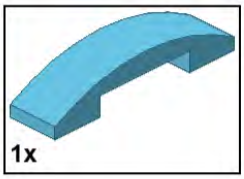

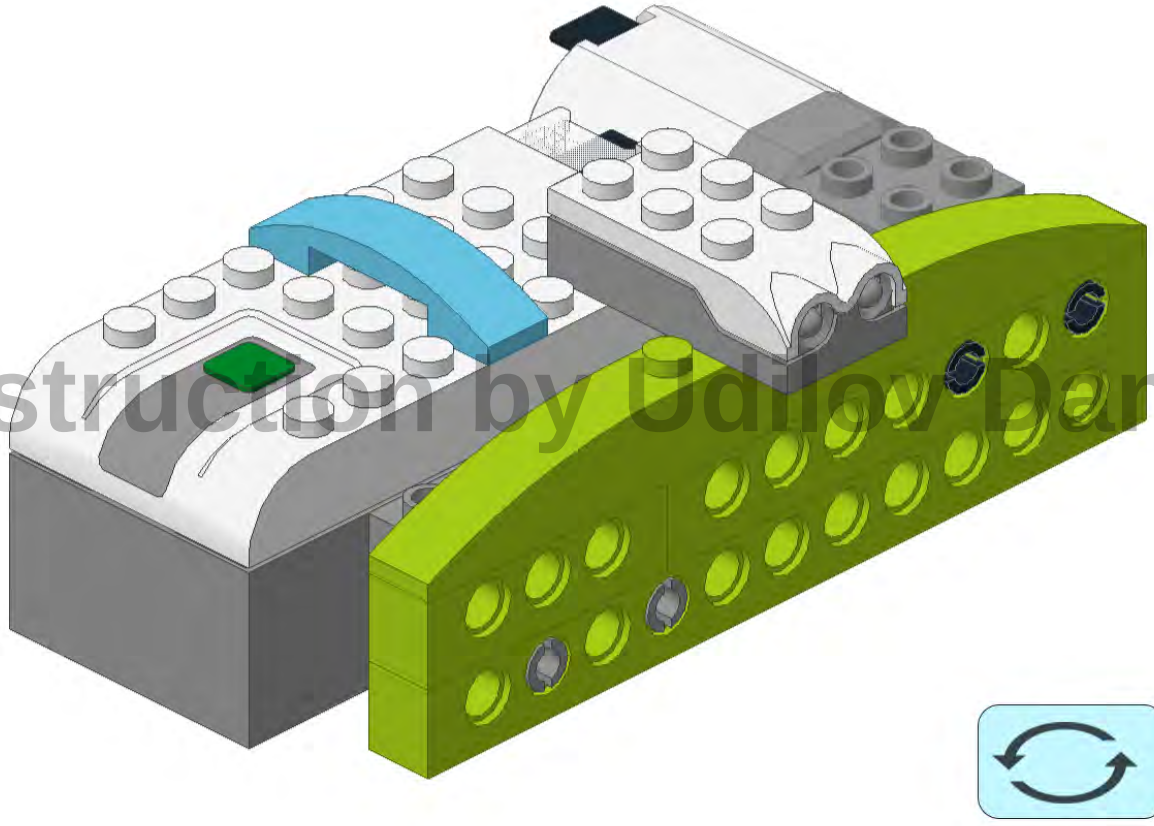

Instruction by Udilov Daniil

1

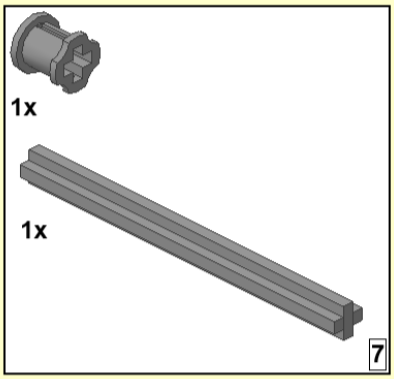

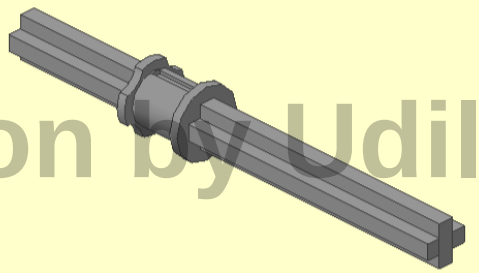

Instruction by Udilov Daniil

2

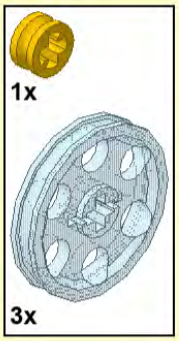

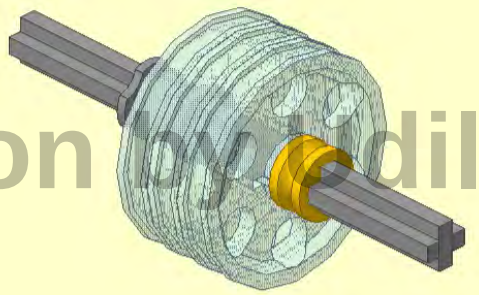

Instruction by Sadilov Daniil

3

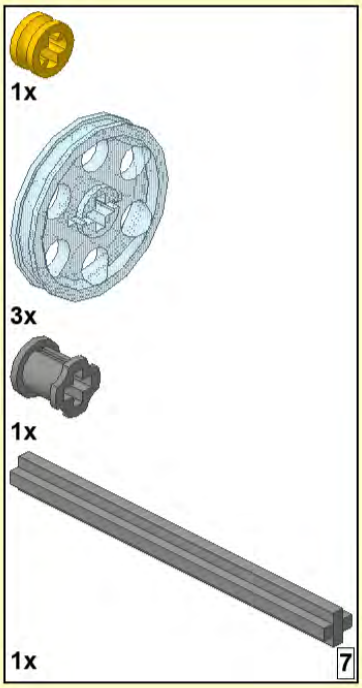

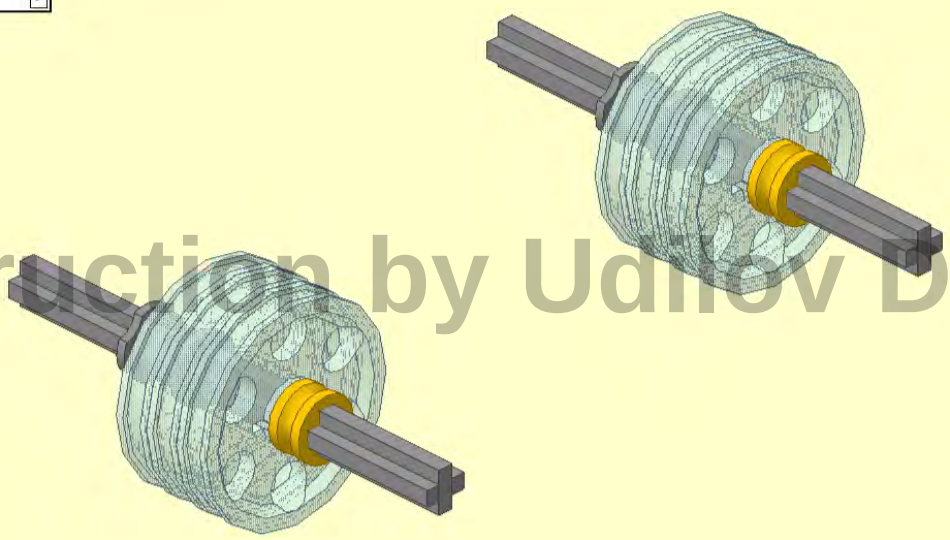

Instruction by Udilov Daniil

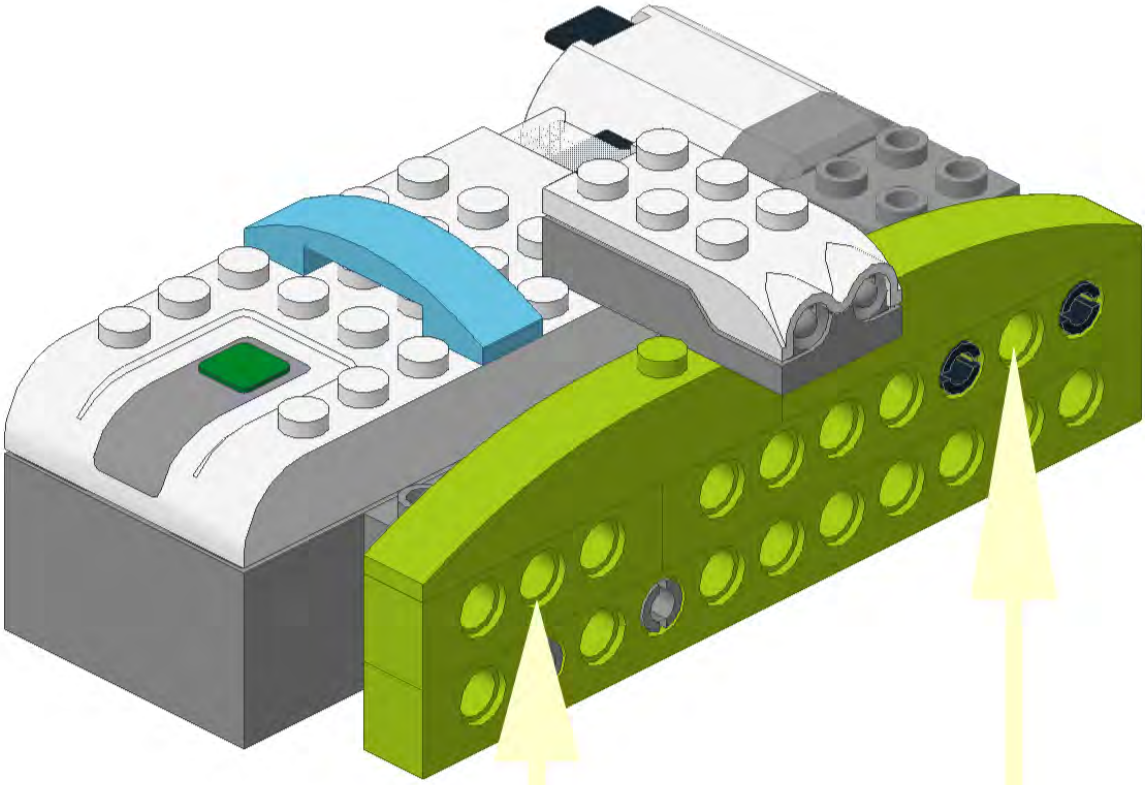

Instruction by Udilov Daniil

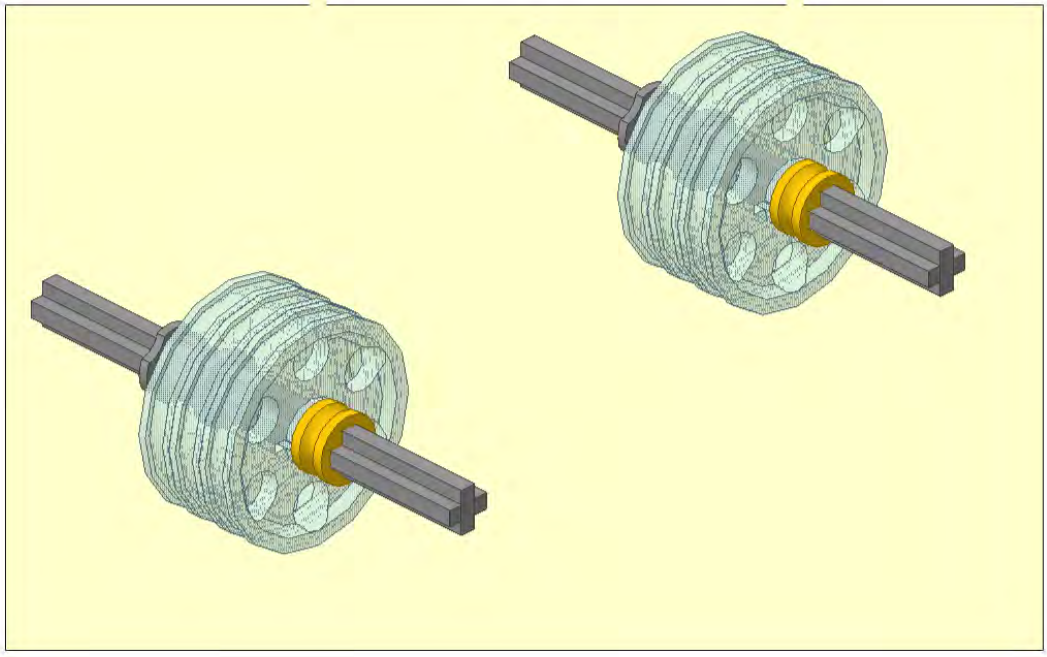

10

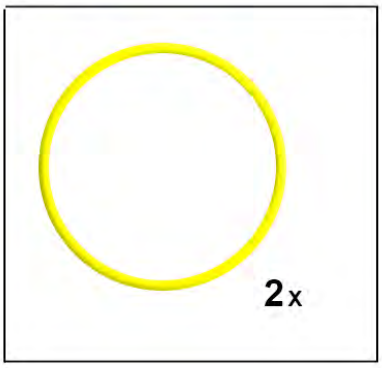

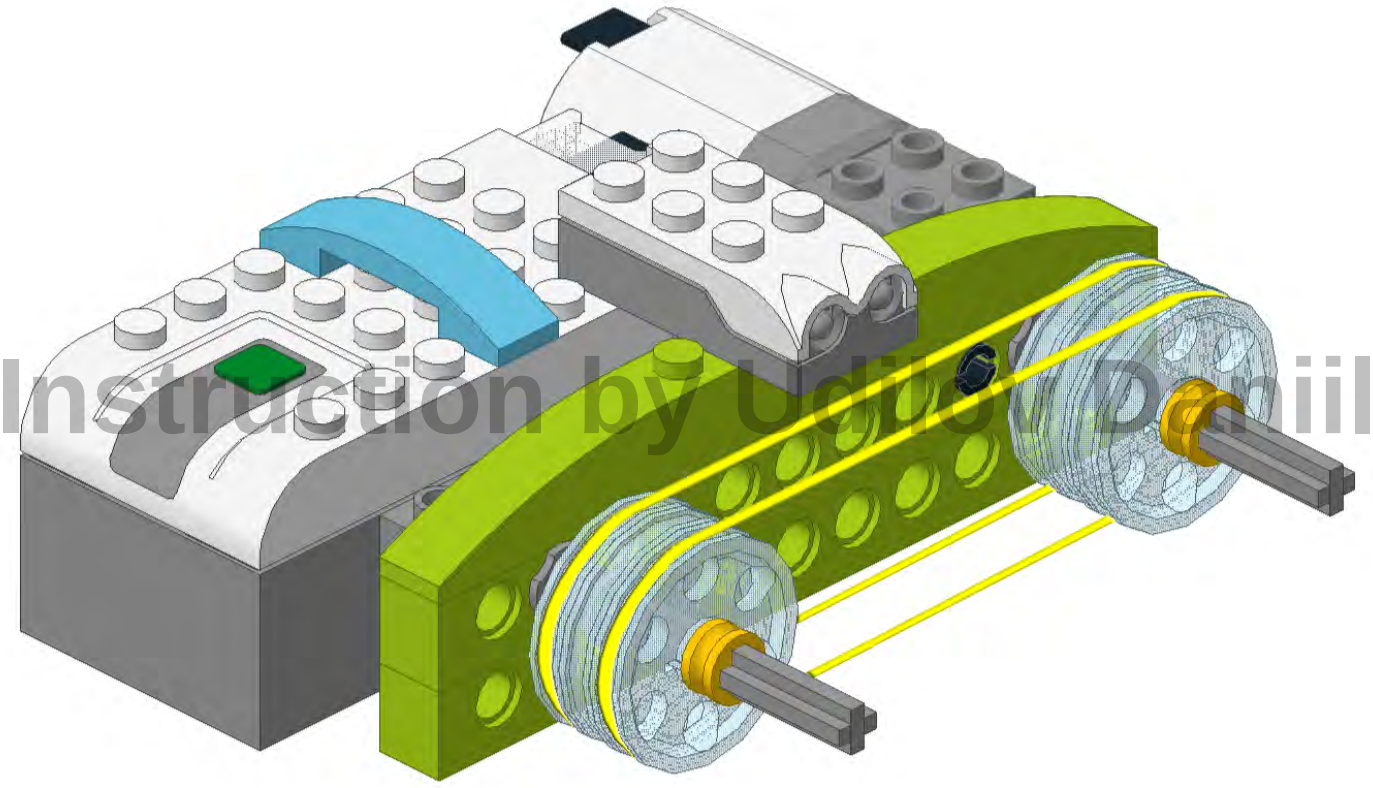

Instruction by Udilov Daniil

11

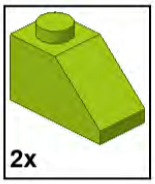

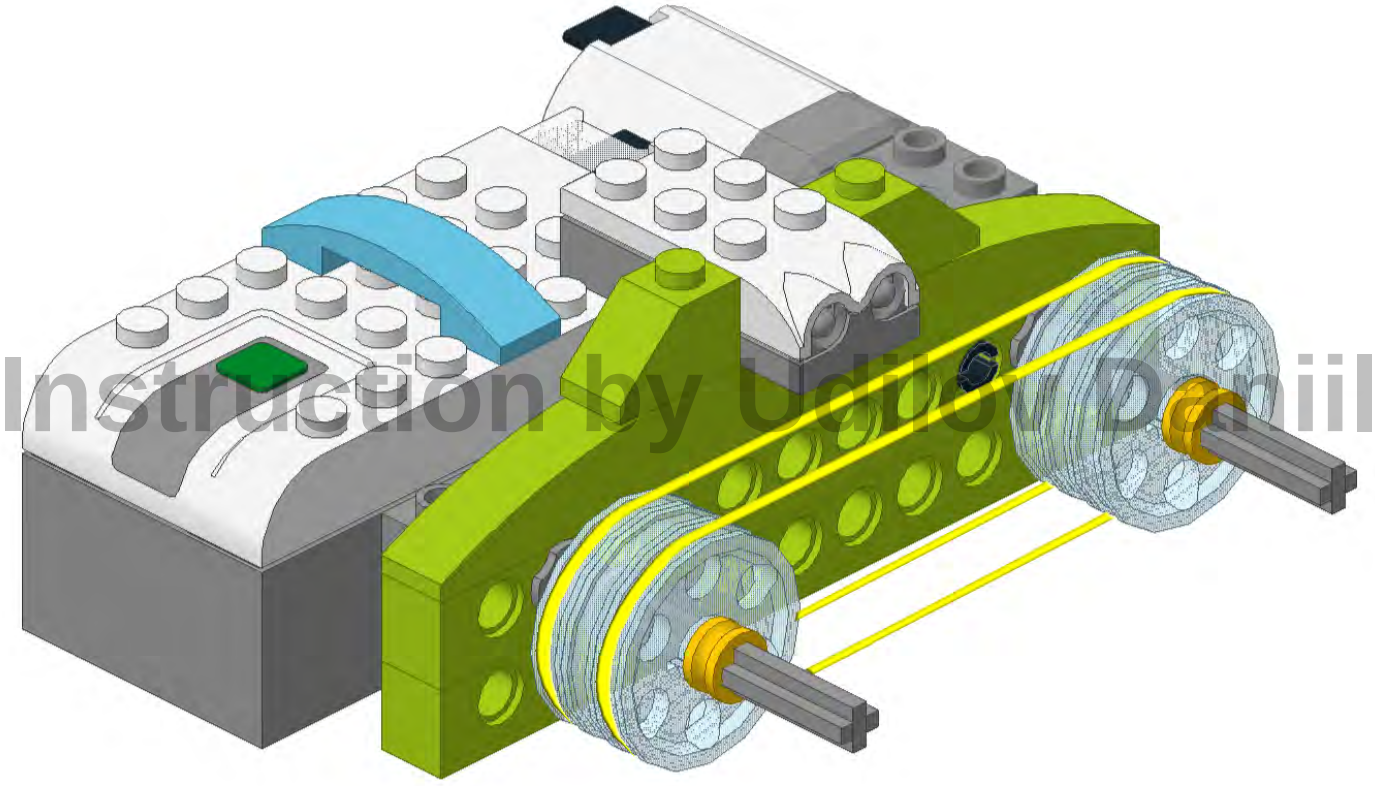

Instruction by Udilo

1

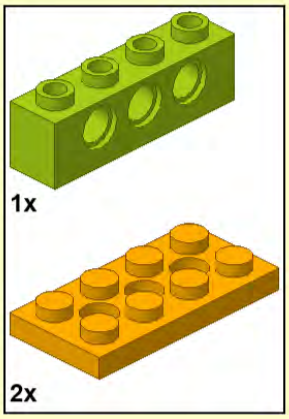

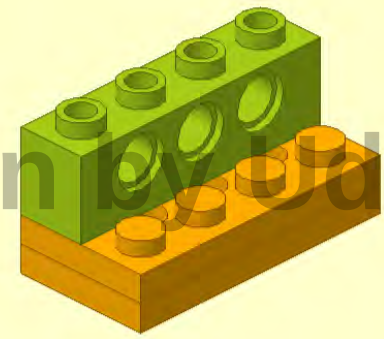

Instruction by Udilov Daniil

2

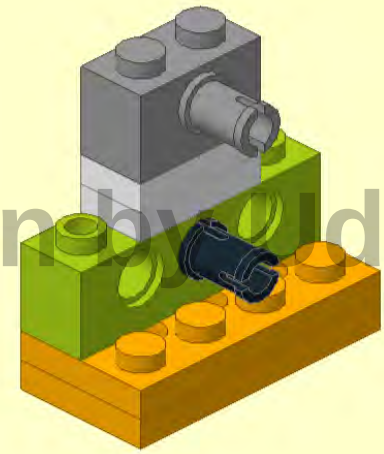

Instruction by Udilov Daniil

3

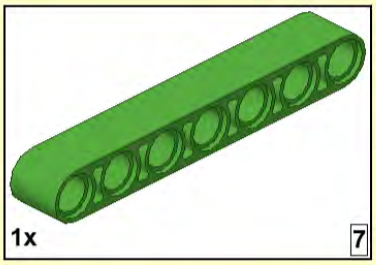

Instruction by Udilov Daniil

4

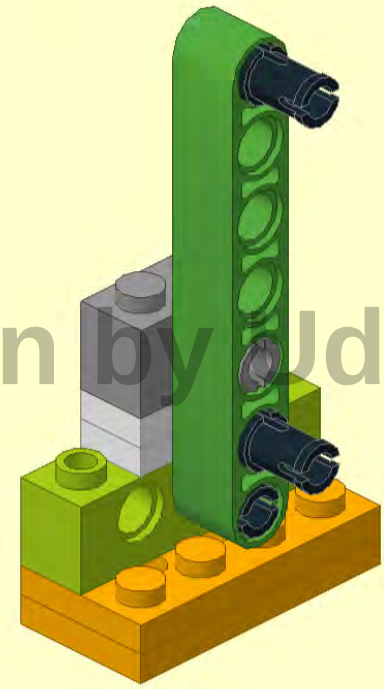

Instruction by Udilov Daniil

12

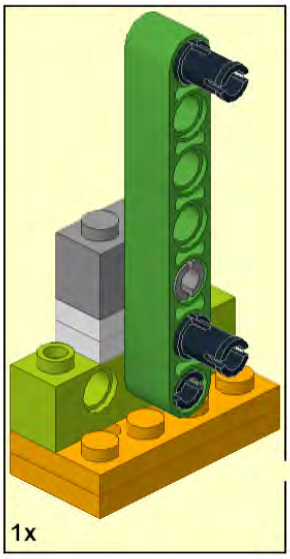

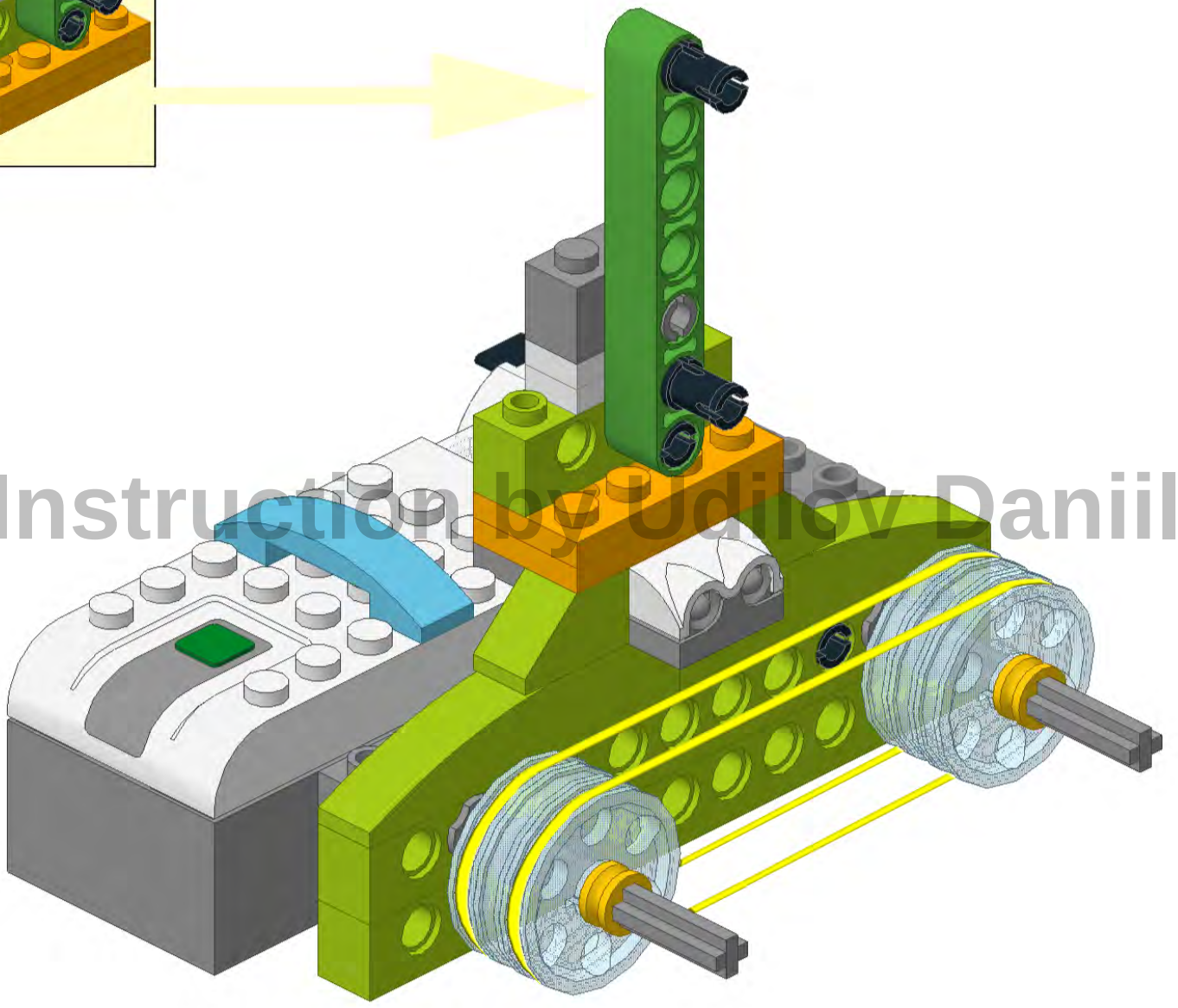

Instruction by Udilov Daniil

1

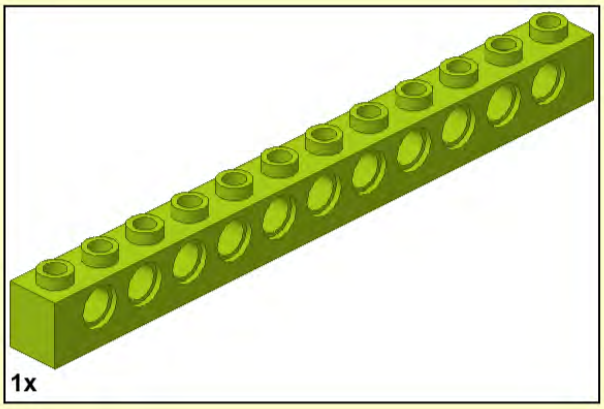

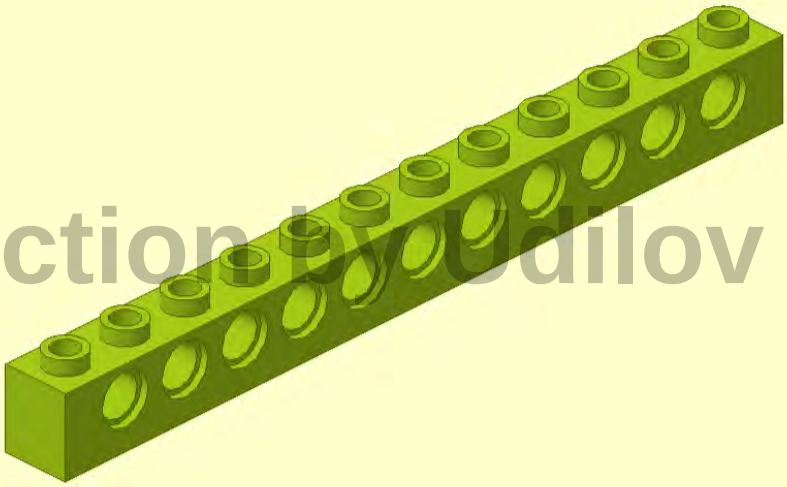

Instruction by Odilov Daniil

2

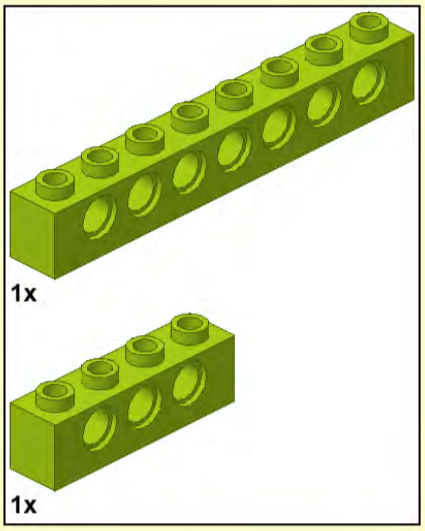

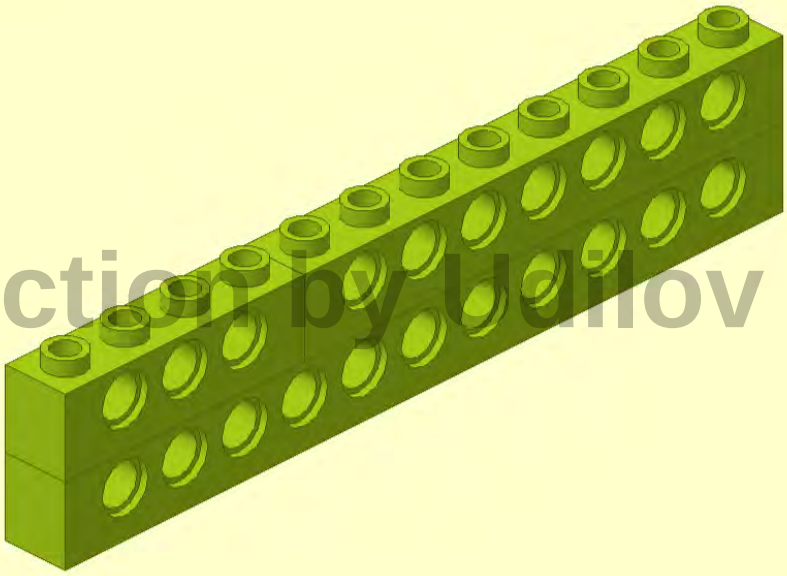

Instruction by Udilov Daniil

3

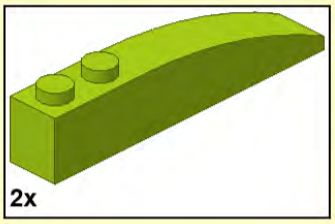

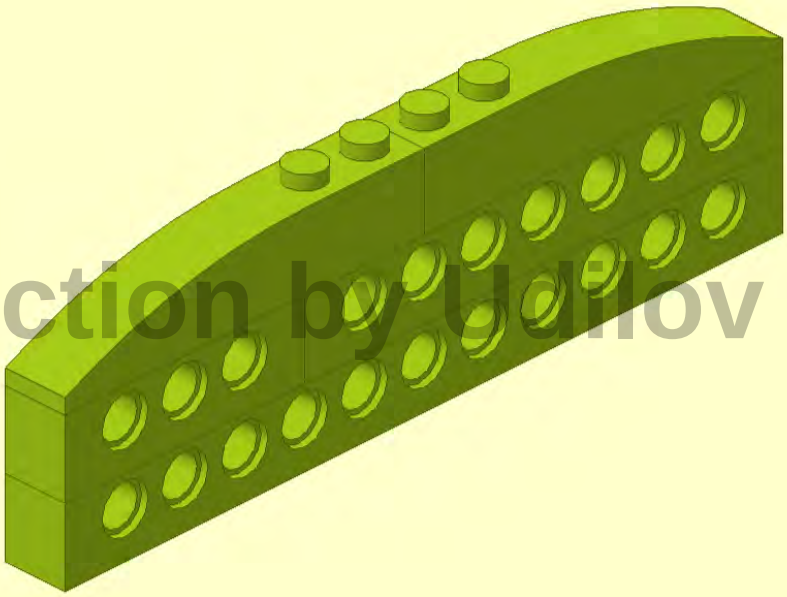

Instruction by Ujilov Daniil

13

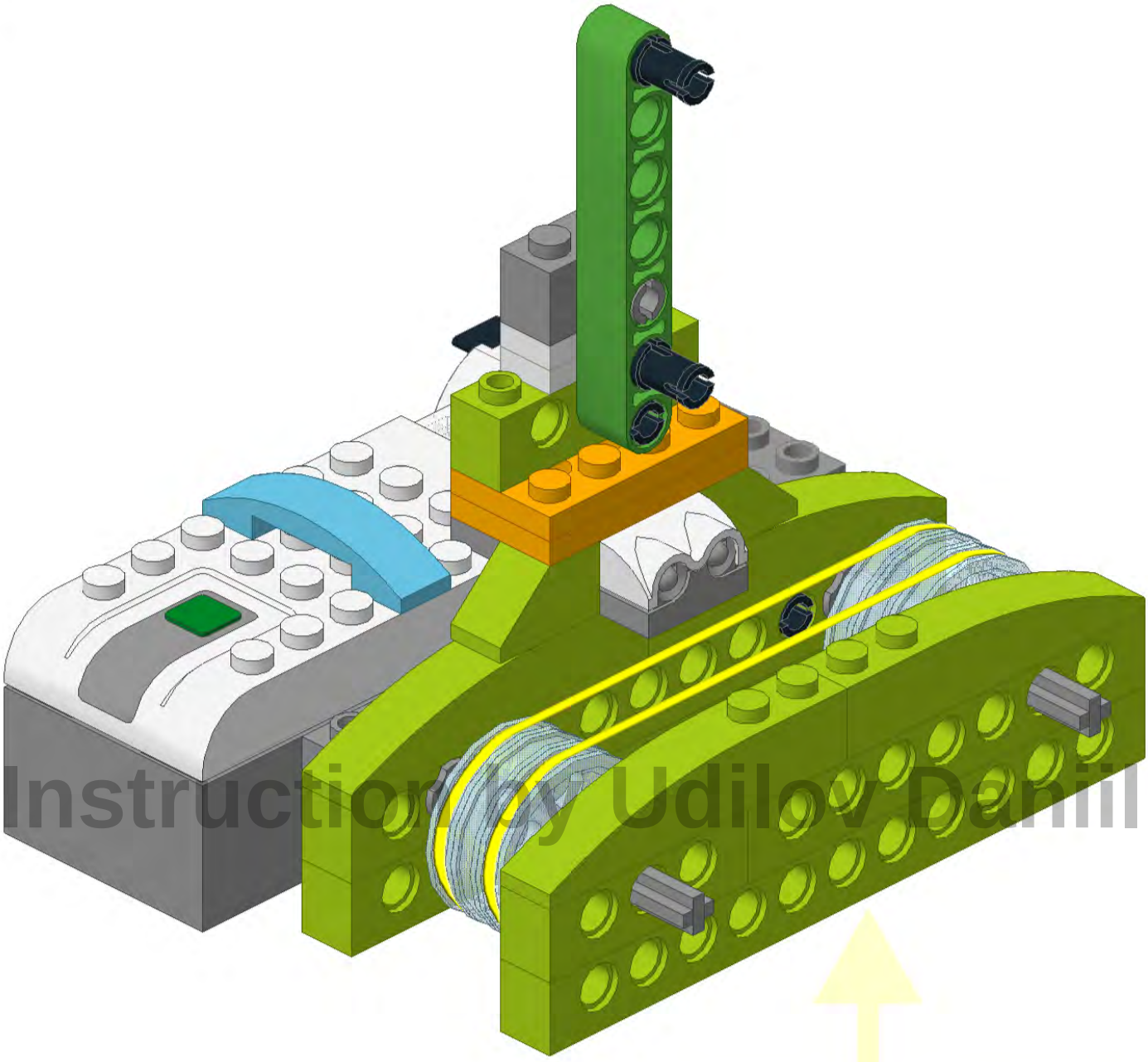

Instruction by Udilov Daniil

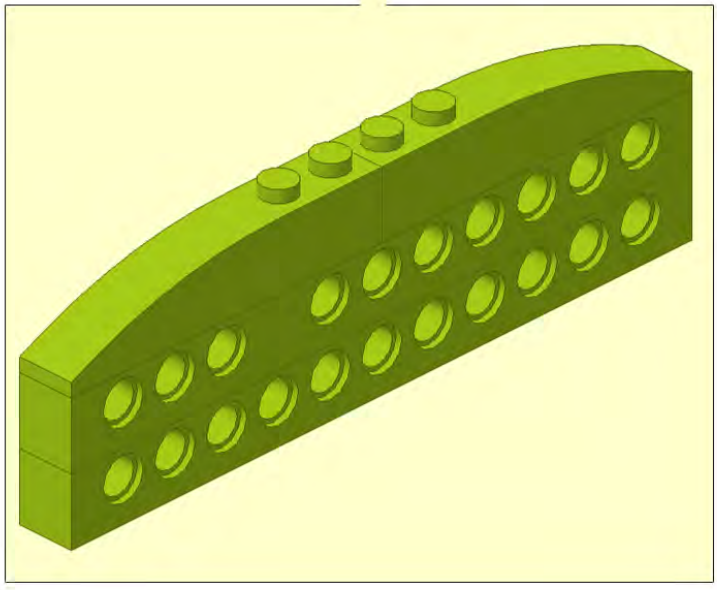

14

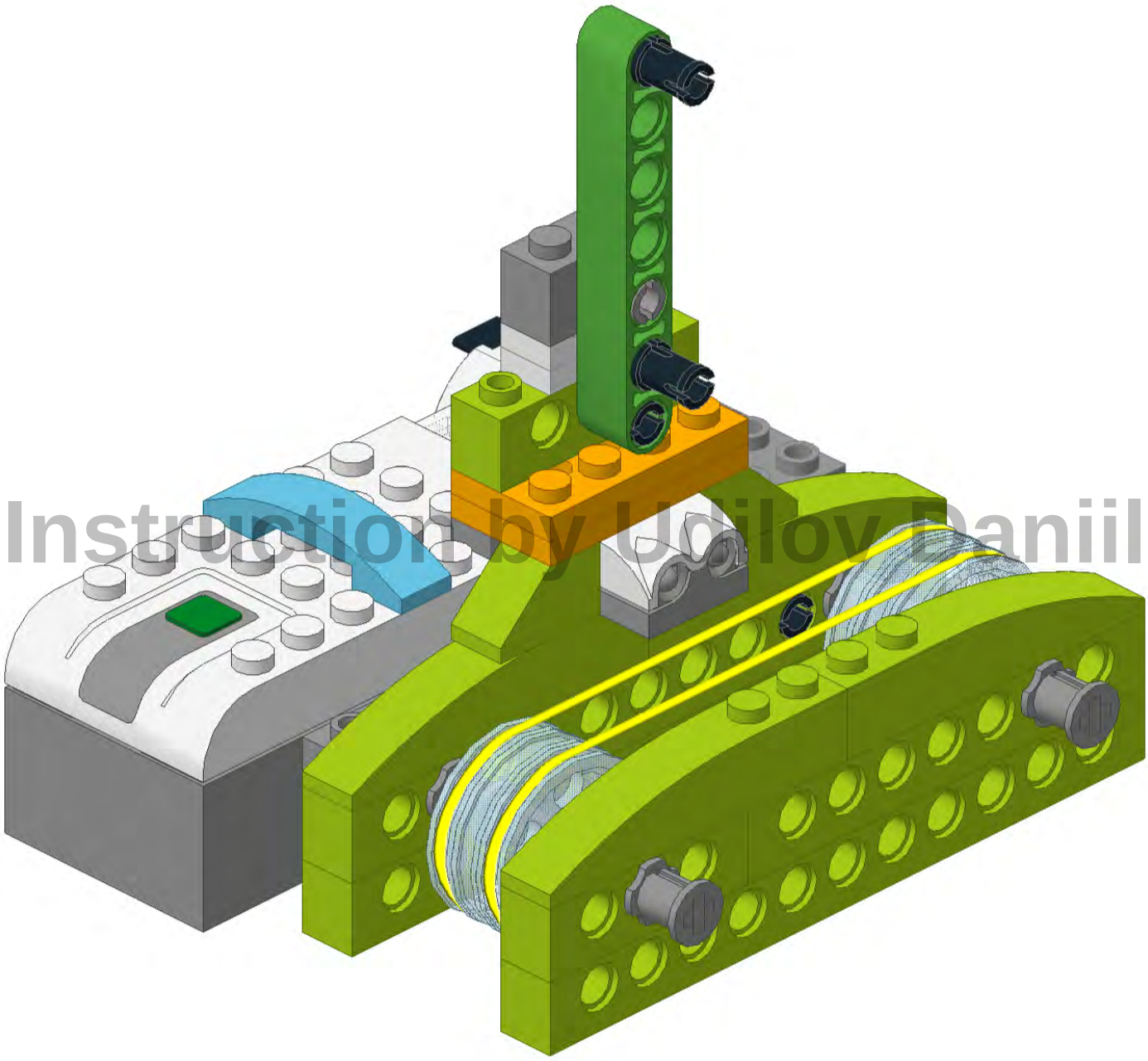

Instruction by Ubilov Daniil

15

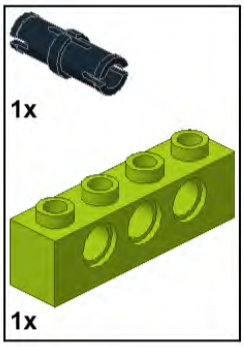

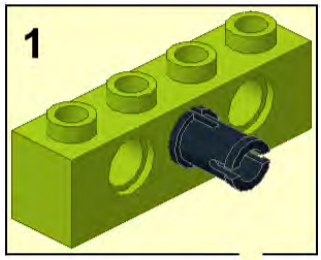

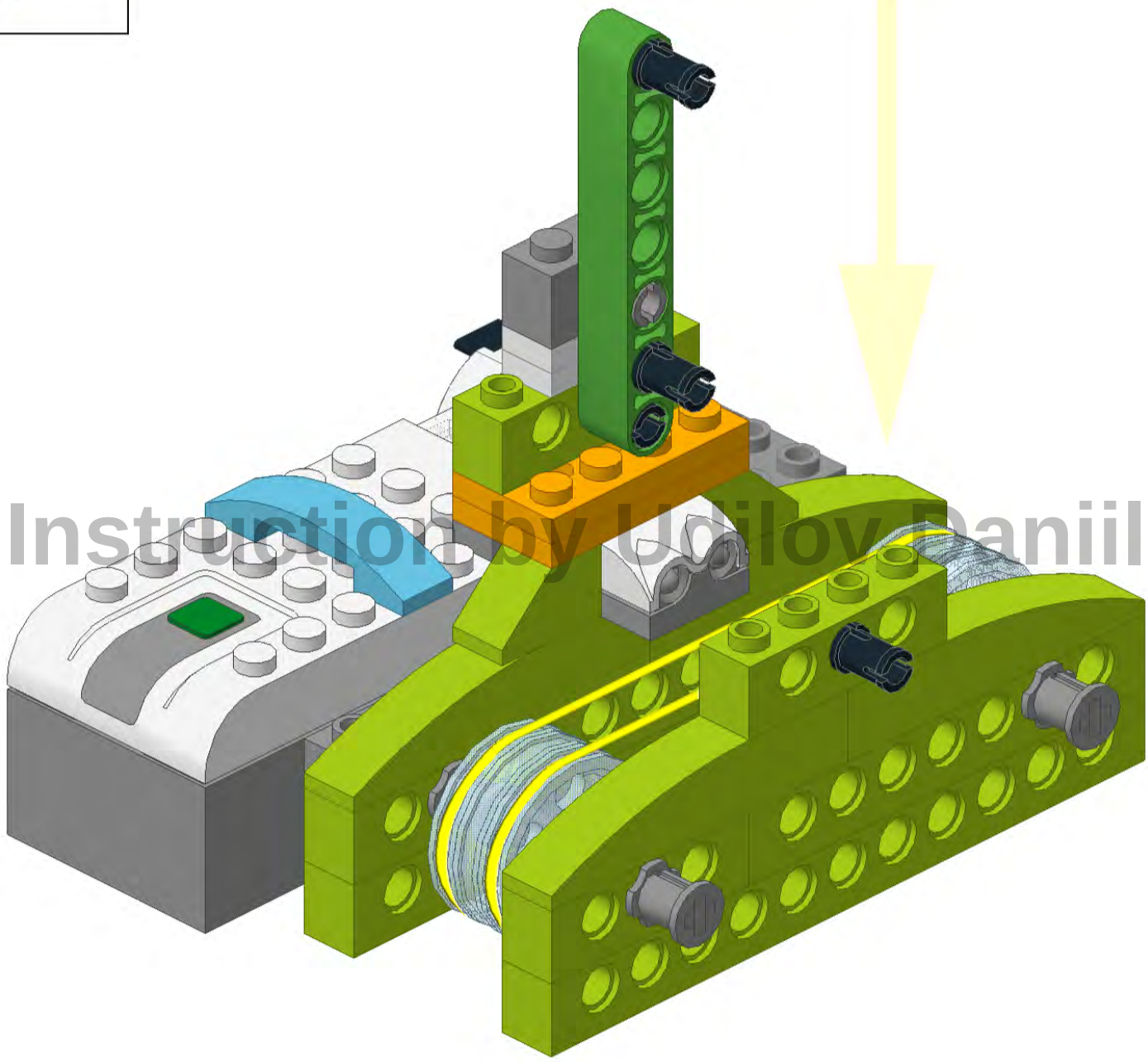

Instruction by Ubilov Daniil

1

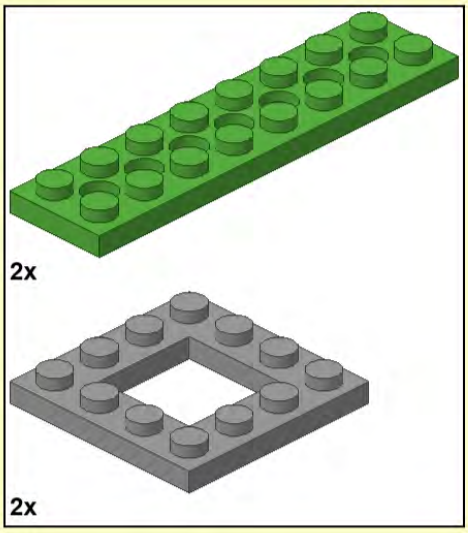

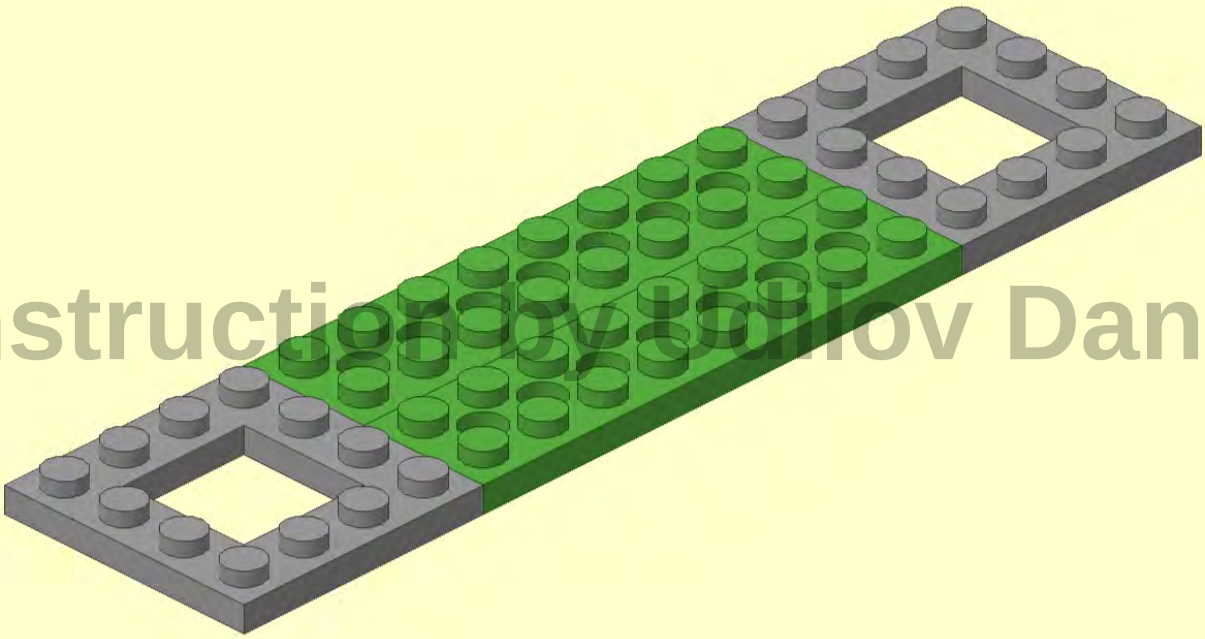

Instruction by Sidilov Daniil

2

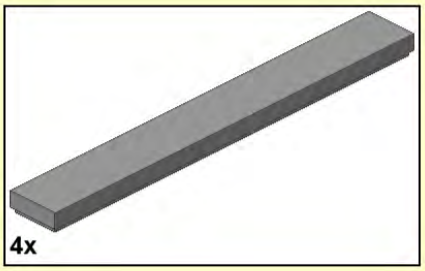

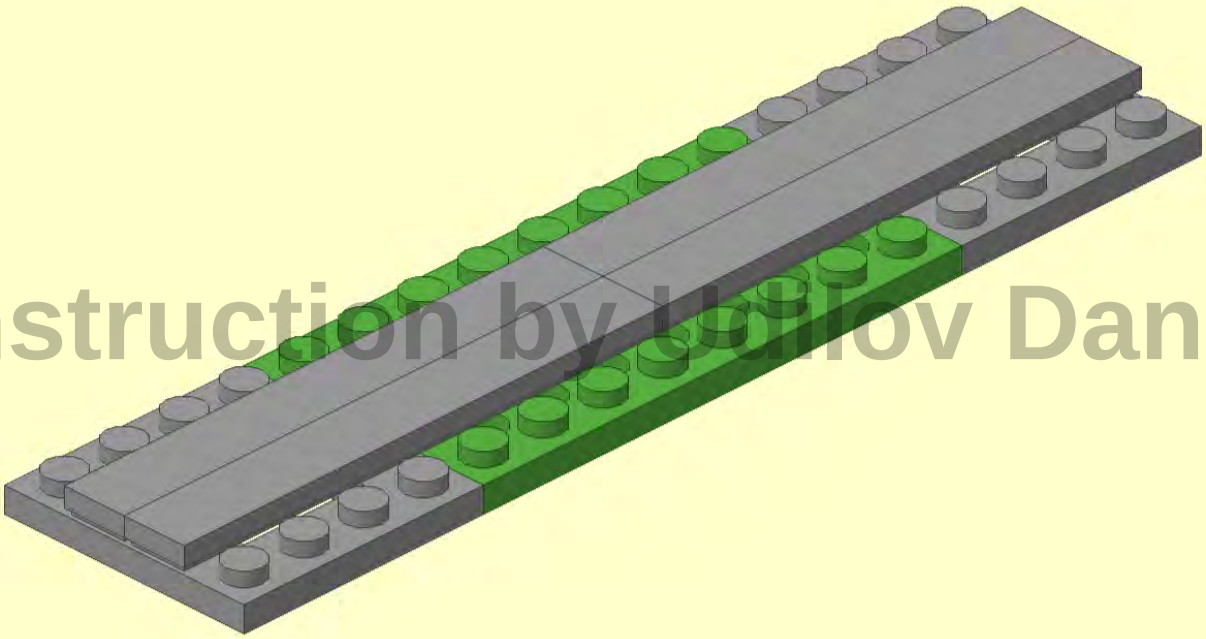

Instruction by Ladilov Daniil

3

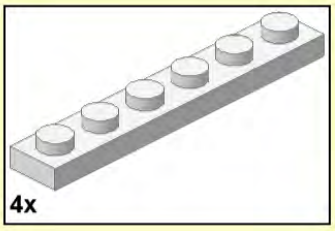

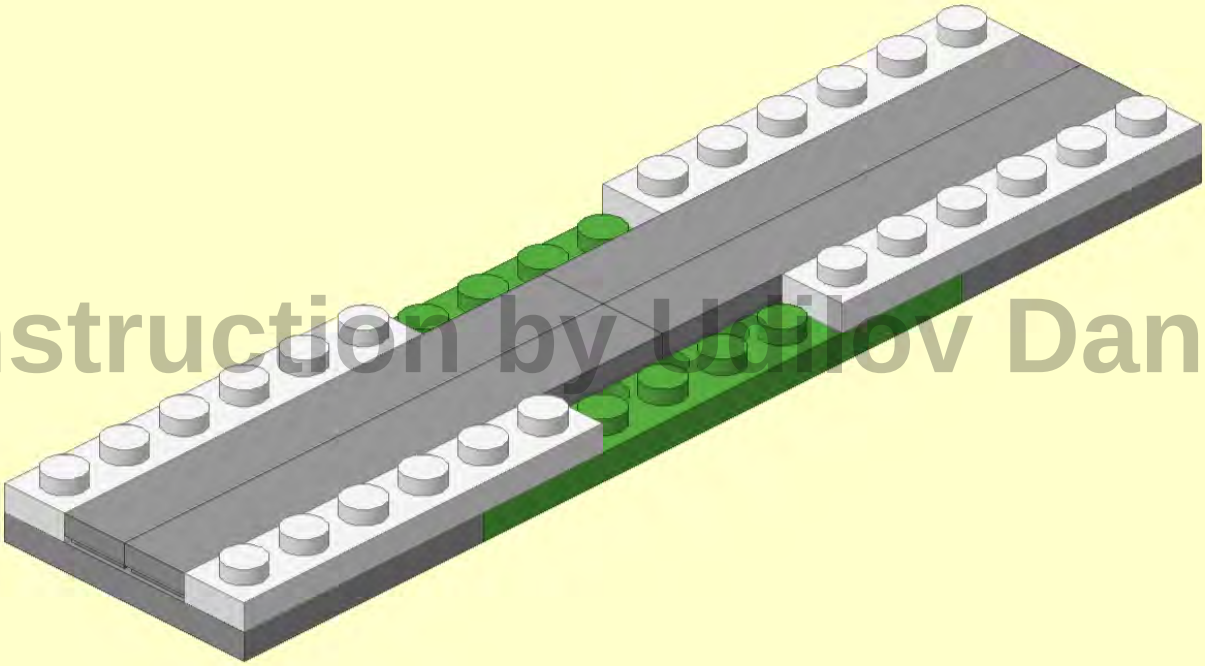

Instruction by Ubilov Daniil

4

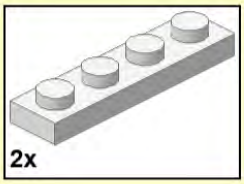

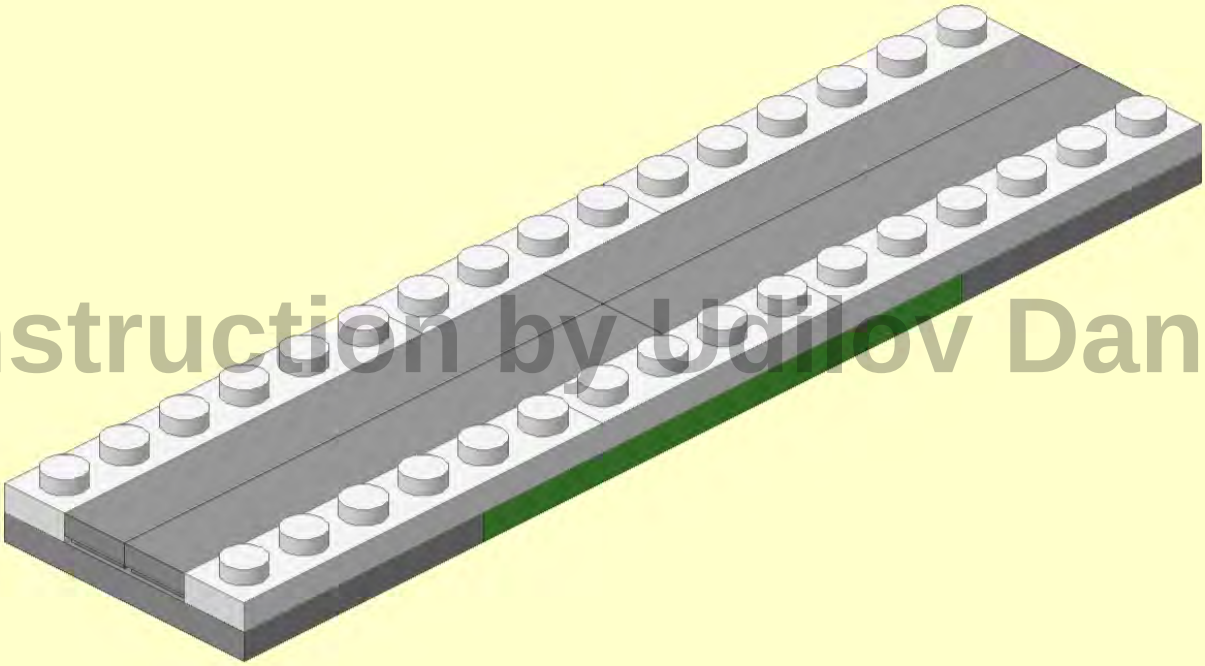

Instruction by Udilov Daniil

5

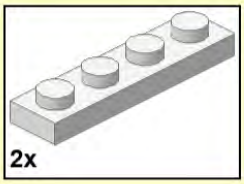

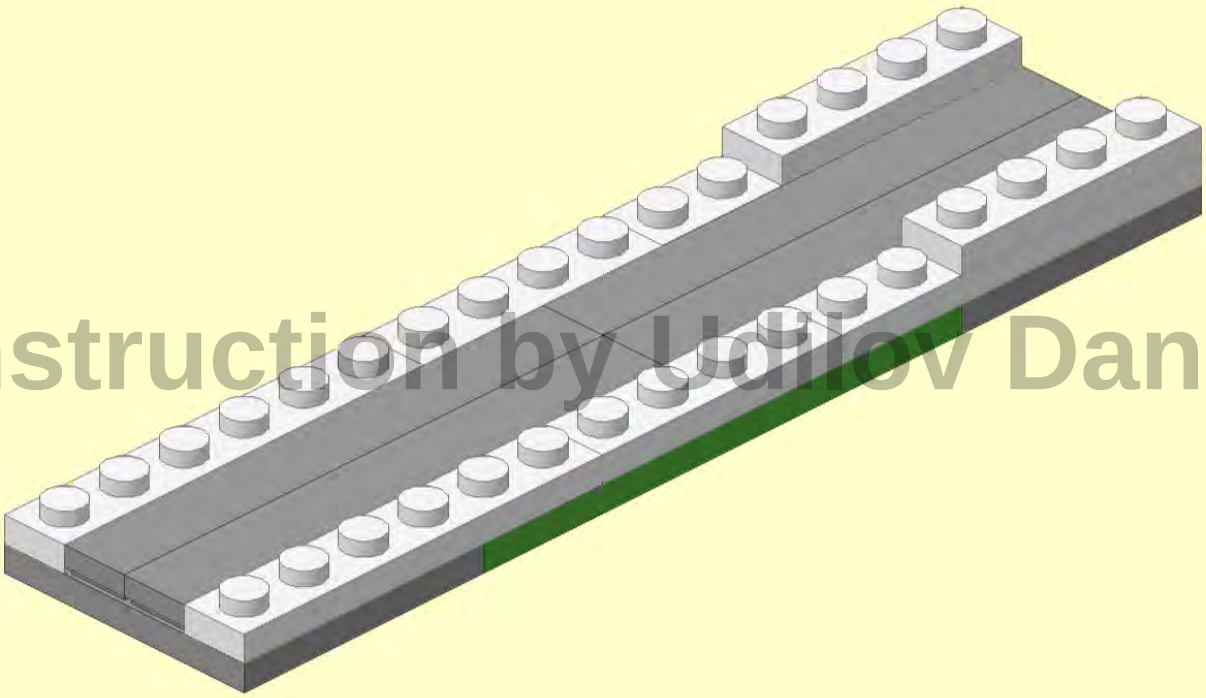

Instruction by Udilov Daniil

6

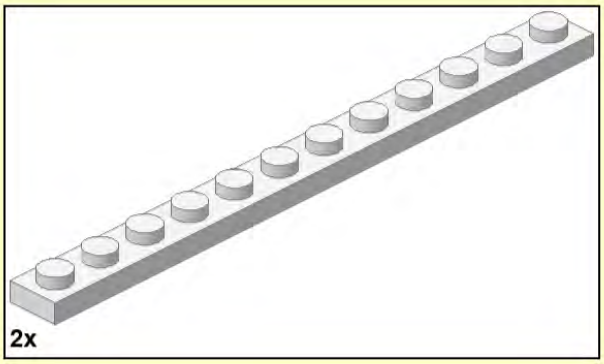

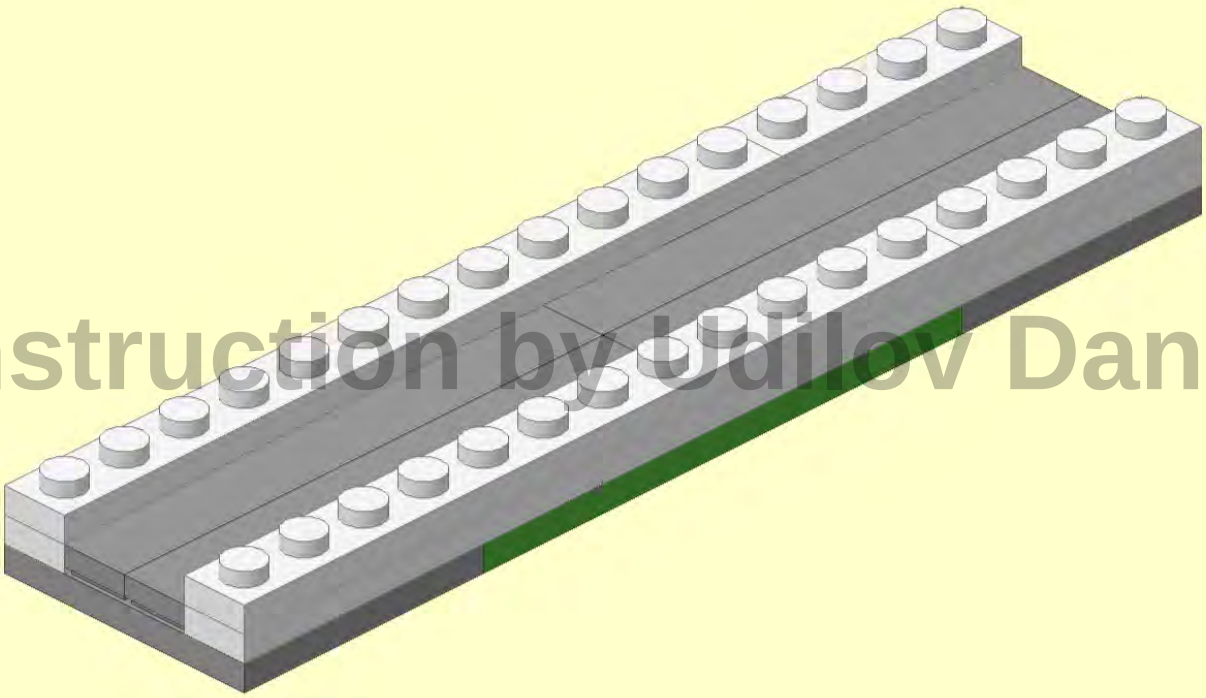

Instruction by Udilov Daniil

7

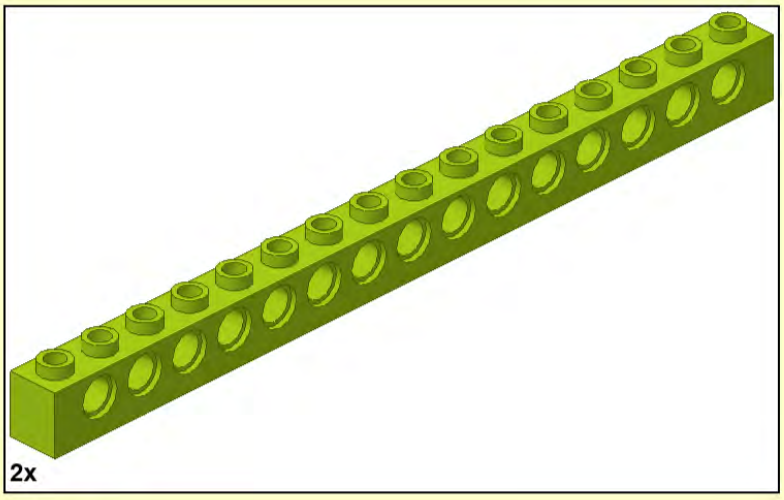

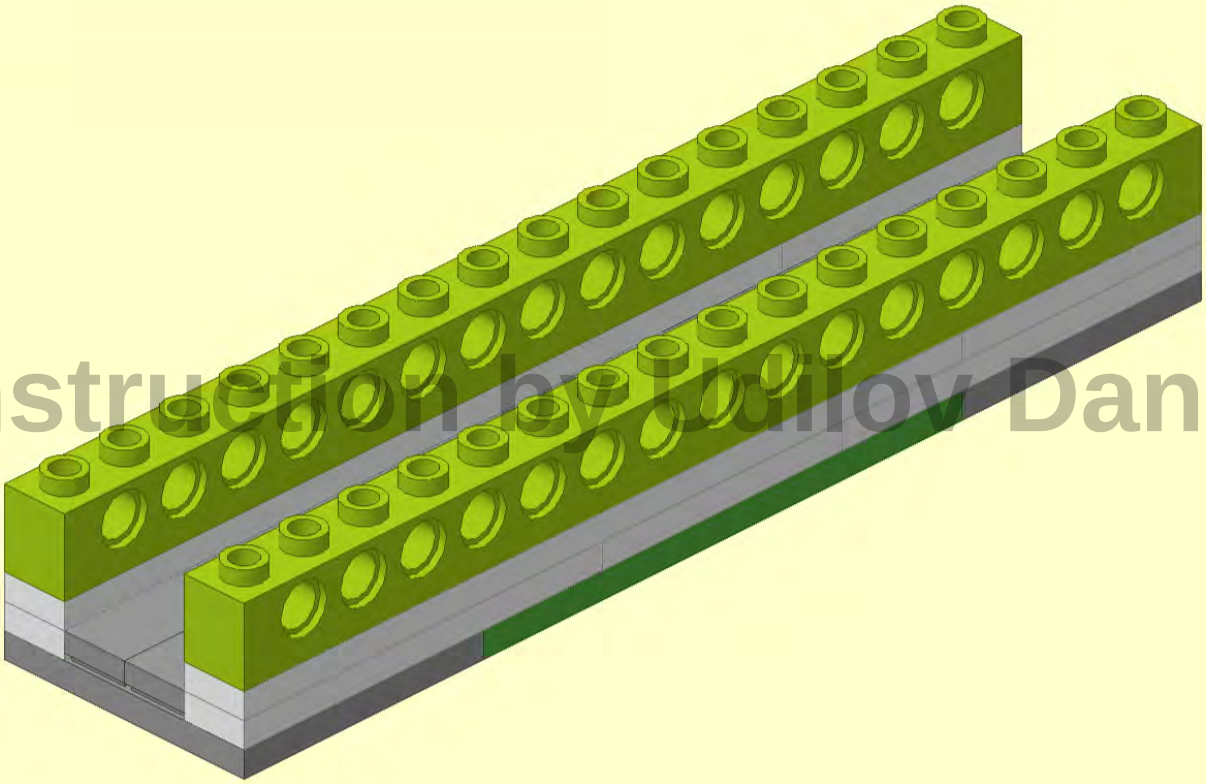

Instruction by Ibaliov Daniil

1

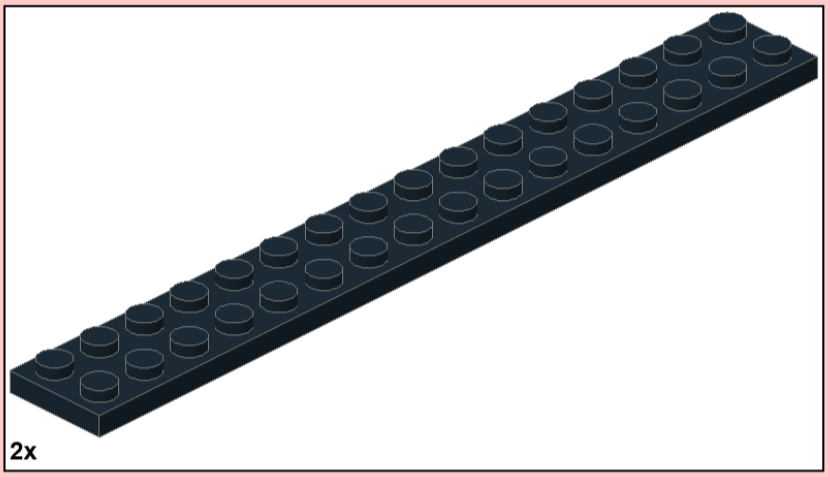

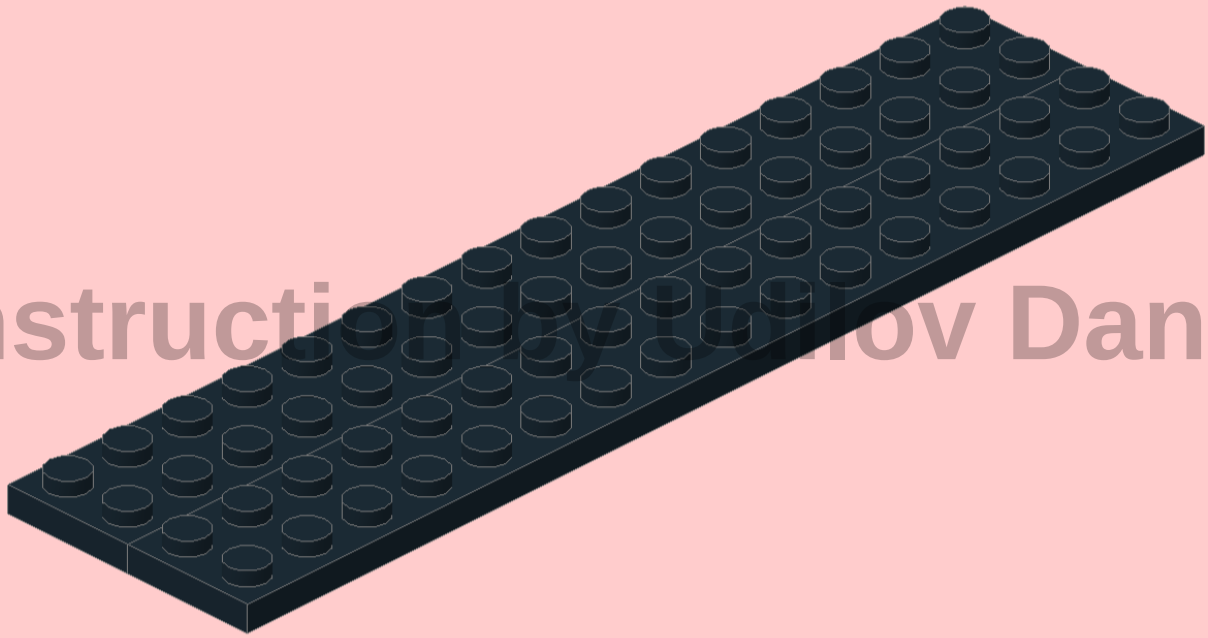

Instructions Kozlov Daniil

2

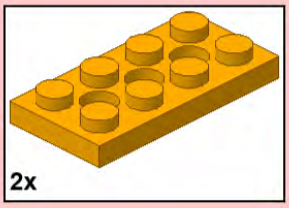

Instructions by Shlov Daniil

8

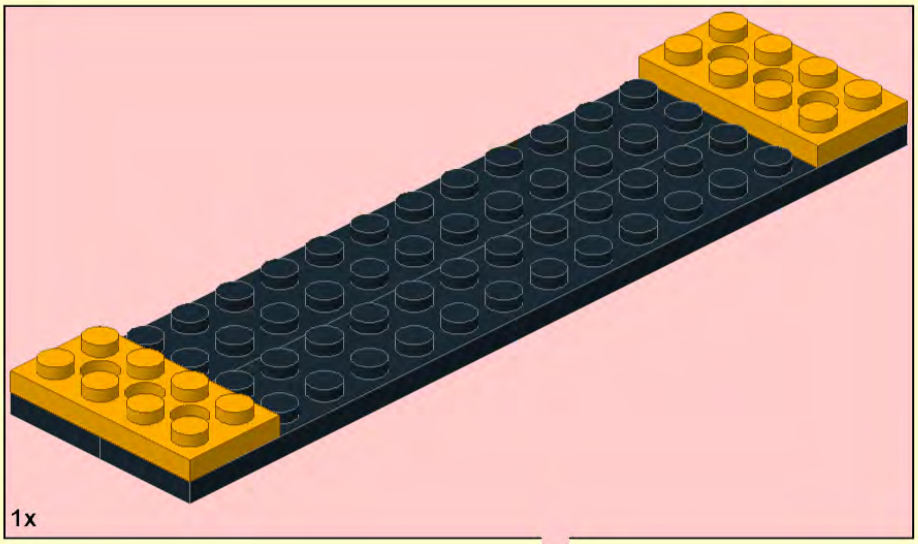

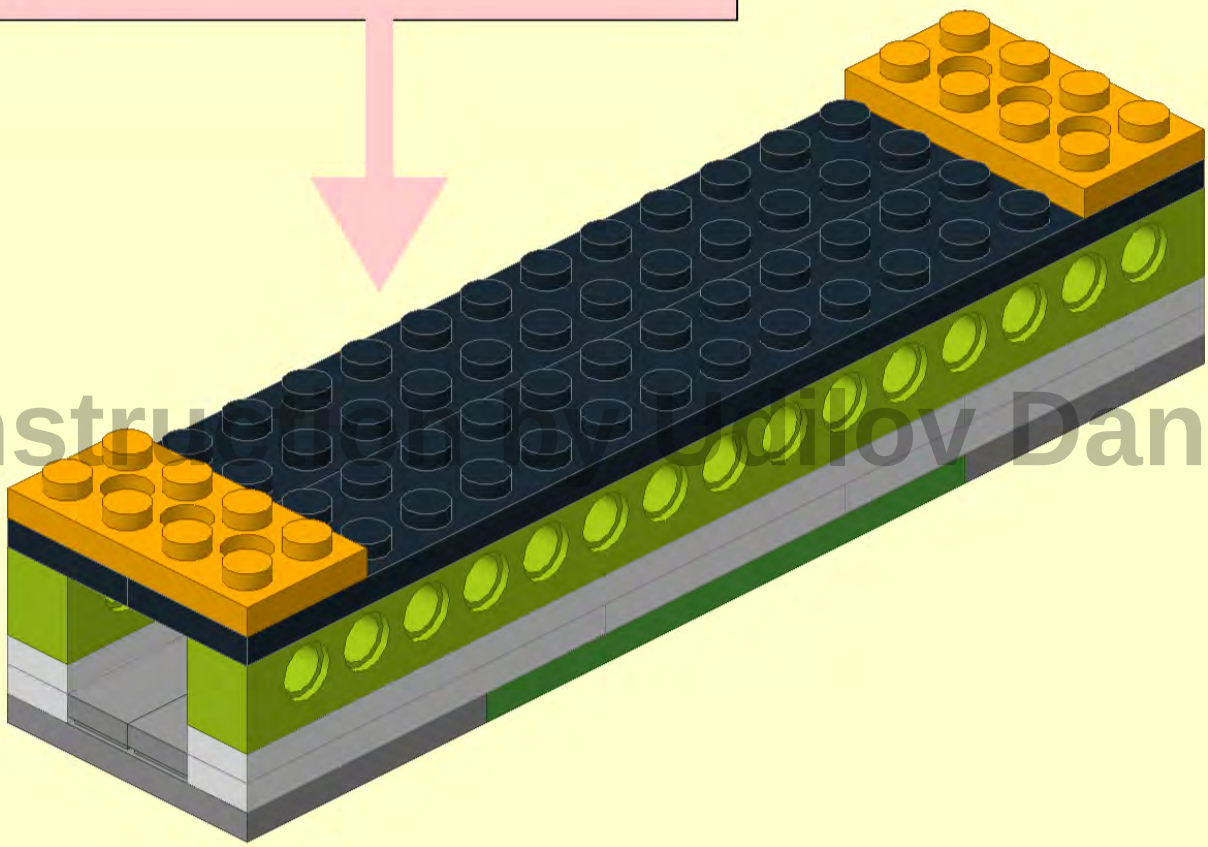

Instruc[illegible] Sadilov Daniil

9

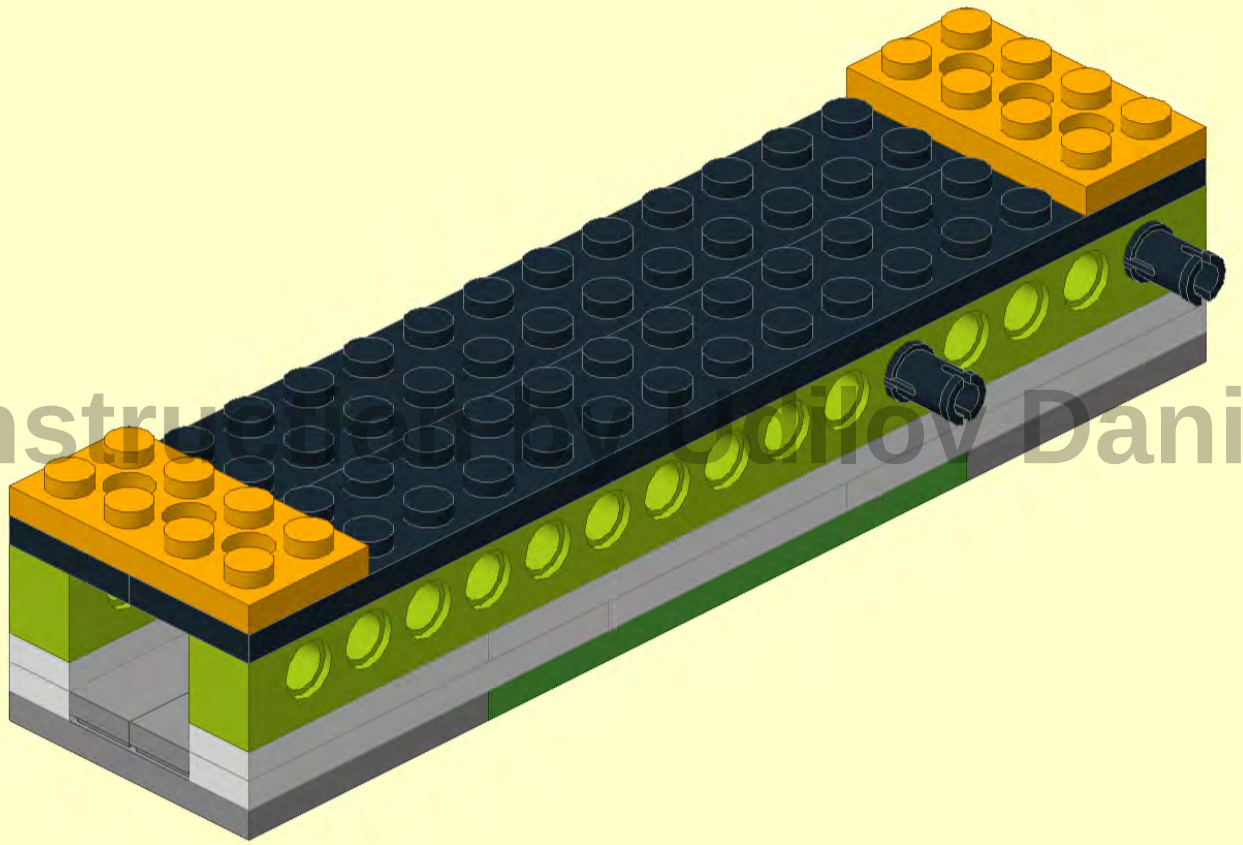

Instruction by Vodilov Daniil

10

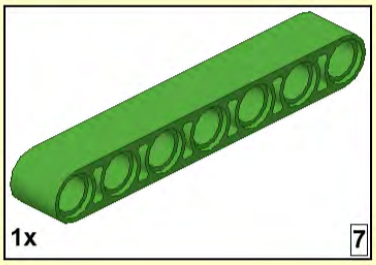

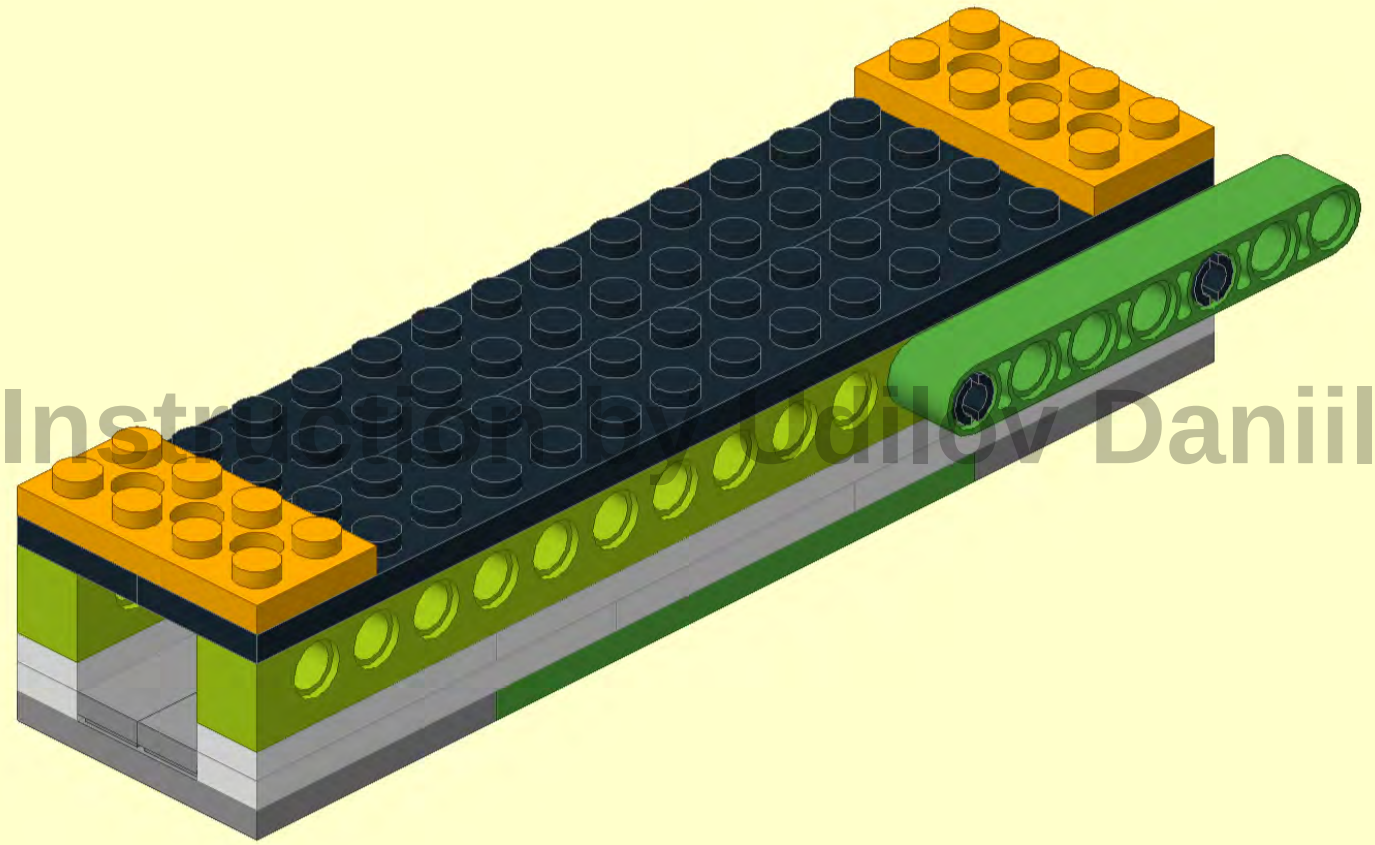

Instructions by Odilov Daniil

11

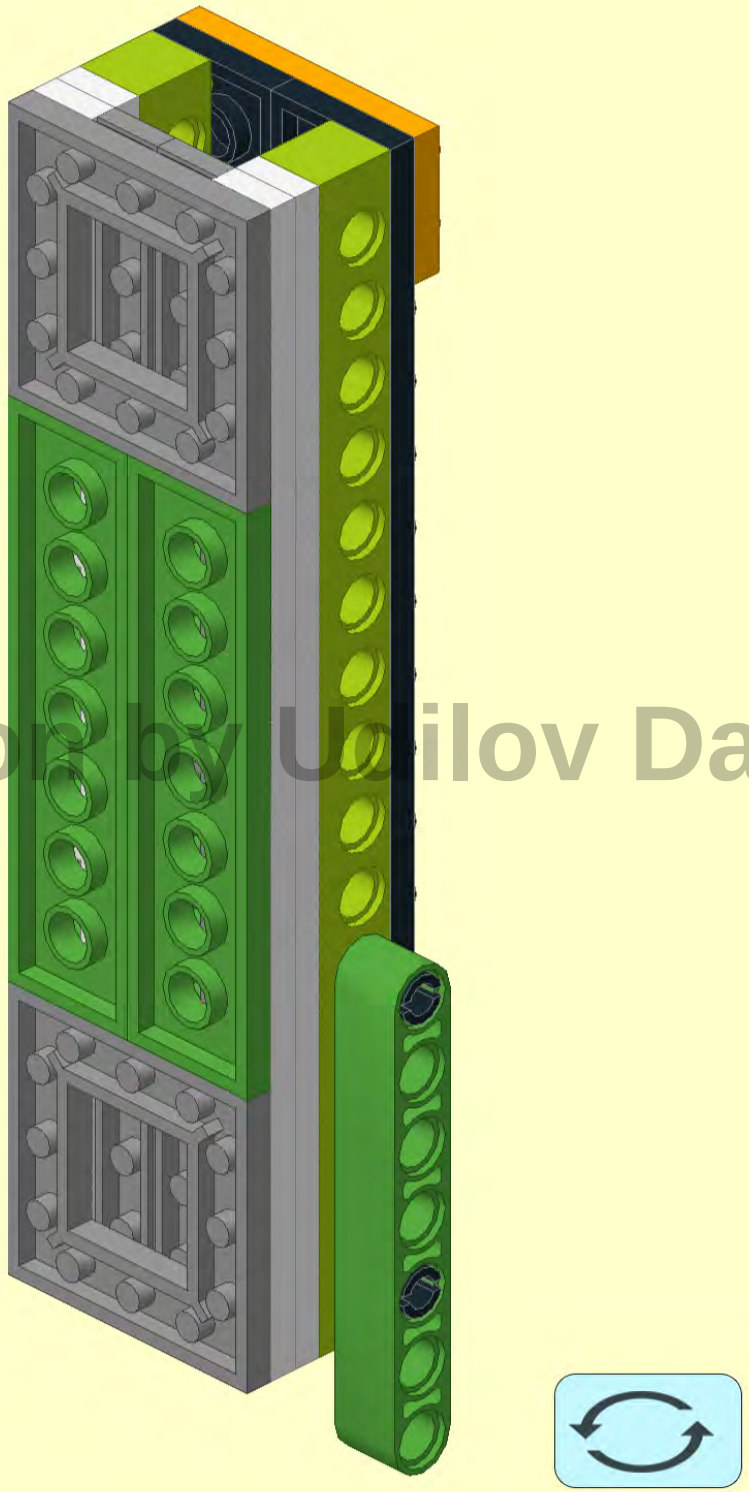

Instructions by Ucilov Daniil

16

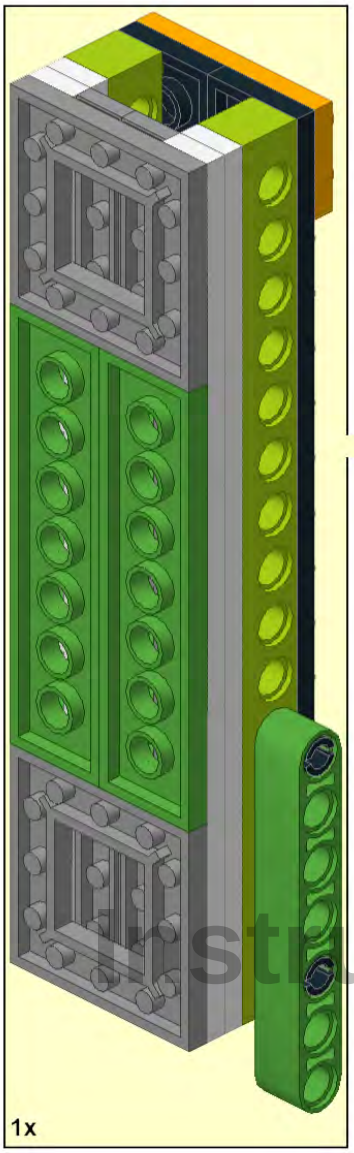

Instruction by Udilov Daniil

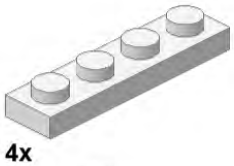

4x

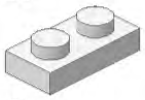

2x

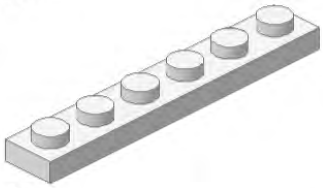

4x

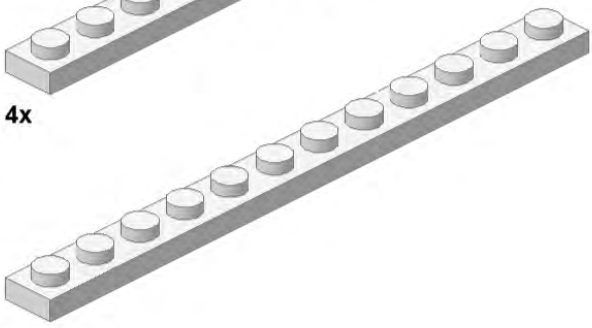

2x

1x

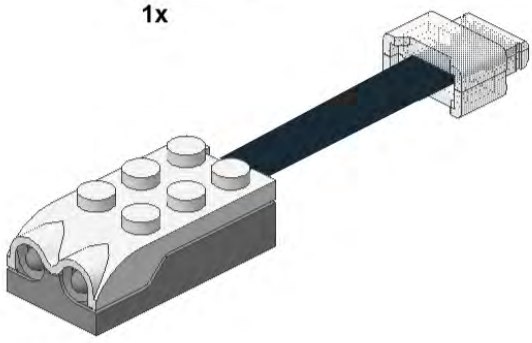

1x

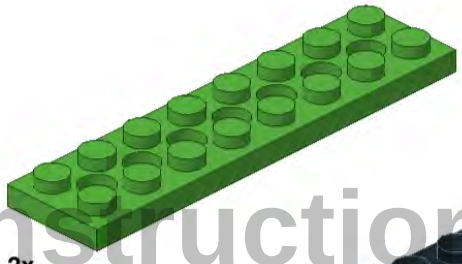

2x

2x

4x

8x

2x

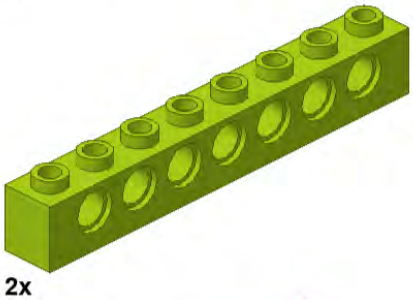

2x

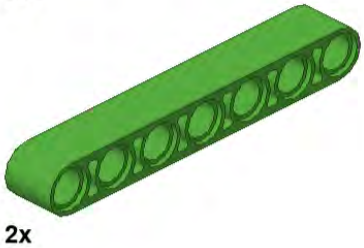

2x

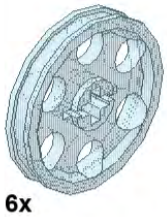

6x

Instructions by Odilov Daniil

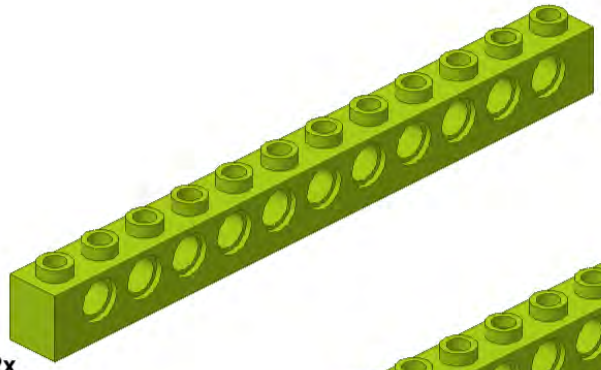

2x

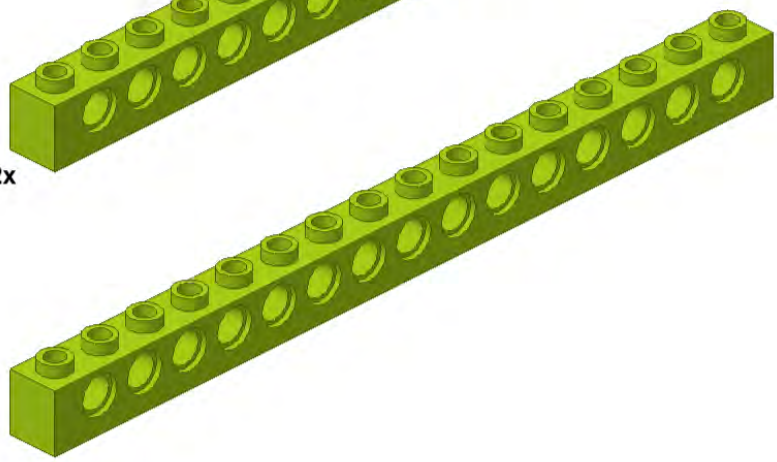

2x

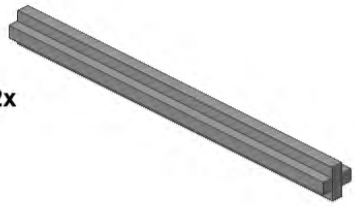

2x

7

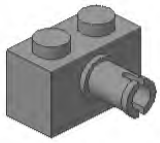

3x

1x

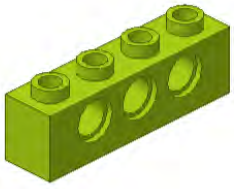

4x

Instruction by Udilov Daniil

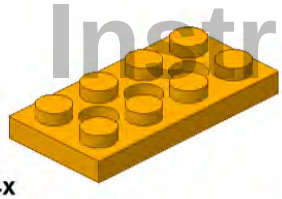

4x

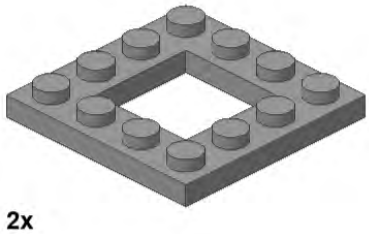

2x

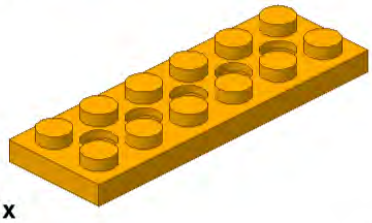

1x

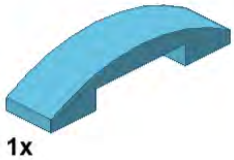

1x

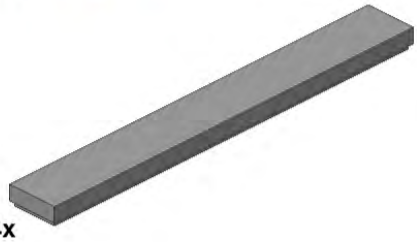

4x

4x

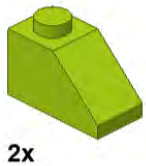

2x

SORTER PROGRAM

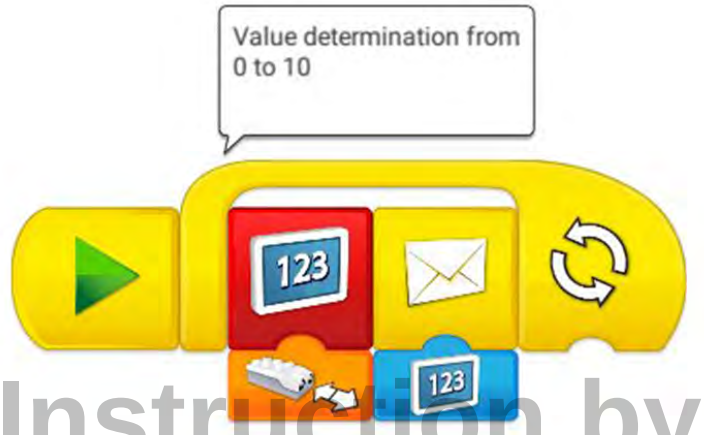

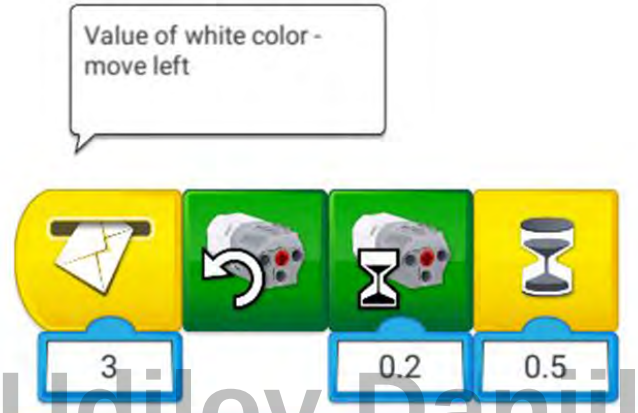
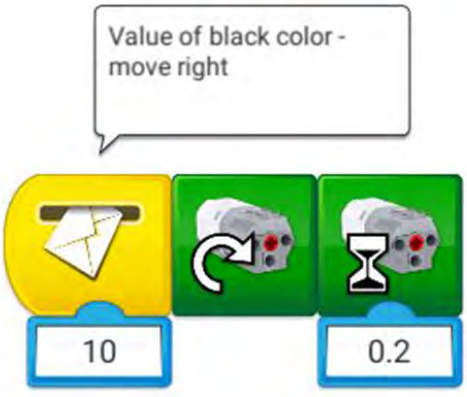
Instruction by Udilov Daniil